TENTATIVE AGENDA & MEETING NOTICE
BOARD OF COUNTY COMMISSIONERS

TUESDAY, SEPTEMBER 6, 2011
8:00 A.M.

WATAUGA COUNTY ADMINISTRATION BUILDING
COMMISSIONERS' BOARD ROOM

TIME	#	TOPIC	PRESENTER	PAGE
8:00	1	CALL REGULAR MEETING TO ORDER		
	2	APPROVAL OF MINUTES: August 16, 2011, Regular Meeting August 16, 2011, Closed Session		1
	3	AGENDA		17
8:05	4	SHERIFF'S OFFICE MATTERS		
		A. Out-of-State Travel Request	SHERIFF HAGAMAN & CPT. DEE DEE ROMINGER	18
		B. Repeater Site Upgrades Request	CPT. JEFF VIRGINIA	29
8:10	5	APPALACHIAN STATE UNIVERSITY (ASU) MATTERS		
		A. REQUEST TO USE THE OLD HIGH SCHOOL SOFTBALL FIELD	MR. JOHN WELCH	35
		B. REQUEST TO USE THE OLD HIGH SCHOOL PARKING LOT	MR. DOUG JUSTICE	43
8:15	6	SMART START ADMIN FUNDING REQUEST	MS. FREDA SMITH	47
8:20	7	TOURISM DEVELOPMENT AUTHORITY (TDA) MATTERS		
		A. Annual Report for Fiscal Year 2011	MR. WRIGHT TILLEY	51
		B. Rocky Knob Phase II Change Order Request	MR. ERIC WOOLRIDGE	61
		C. Bid Award Request for Recreation Support Facilities	MR. ERIC WOOLRIDGE	69
8:25	8	BRUSH GRINDING BID AWARD REQUEST	MR. J. V. POTTER	85
8:30	9	PLANNING AND INSPECTIONS OUT-OF-STATE TRAVEL REQUEST	MR. JOE FURMAN	89
8:35	10	TAX MATTERS	MR. KELVIN BYRD	
		A. Monthly Collections Report		95
		B. Refunds and Releases		97
8:40	11	FINANCE MATTERS	MS. MARGARET PIERCE	
		A. Juvenile Crime Prevention Council (JCPC) Grant Request		99
		B. Surplus Requests		107
		C. Real Property Sale Request		111
8:45	12	MISCELLANEOUS ADMINISTRATIVE MATTERS	MR. DERON GEOUQUE	
		A. Caldwell Community College & Technical Institute (CCC&TI) Joint Meeting Request		119
		B. Proposed E-Verify Memorandum of Understanding		123
		C. Proposed "Moment of Remembrance" Commemorating September 11, 2001		139
		D. Announcements		147

TIME	#	TOPIC	PRESENTER	PAGE
8:50	13	PUBLIC COMMENT		159
9:50	14	BREAK		161
9:55	15	CLOSED SESSION Attorney/Client Matters – G. S. 143-318.11(a)(3)		163
10:15	16	ADJOURN		

AGENDA ITEM 2:

APPROVAL OF THE MINUTES

August 16, 2011, Regular Meeting
August 16, 2011, Closed Session

Blank Page

DRAFT

MINUTES

WATAUGA COUNTY BOARD OF COMMISSIONERS
TUESDAY, AUGUST 16, 2011

The Watauga County Board of Commissioners held a regular meeting on Tuesday, August 16, 2011, at 5:00 P.M. in the Commissioners' Board Room of the Watauga County Administration Building, Boone, North Carolina.

PRESENT: Nathan A. Miller, Chairman
David Blust, Vice-Chairman
Tim Futrelle, Commissioner
Vince Gable, Commissioner
Stacy C. Eggers, IV, County Attorney
Deron Geouque, County Manager
Anita J. Fogle, Clerk to the Board

[Clerk's Note: Commissioner Deal was absent from the meeting due to health issues.]

Chairman Miller called the meeting to order at 5:01 P.M.

Vice-Chairman Blust opened the meeting with a prayer and Commissioner Gable led the Pledge of Allegiance.

APPROVAL OF MINUTES

Chairman Miller called for additions and/or corrections to the August 2, 2011, regular and closed session minutes.

Commissioner Futrelle, seconded by Vice-Chairman Blust, moved to approve the August 2, 2011, regular meeting minutes as presented.

VOTE: Aye-4(Miller, Blust, Futrelle, Gable)
Nay-0
Absent-1(Deal)

[Clerk's Note: Votes marked as absent, that are unexcused, count as Aye votes.]

Commissioner Futrelle, seconded by Vice-Chairman Blust, moved to approve the August 2, 2011, closed session minutes as presented.

VOTE: Aye-4(Miller, Blust, Futrelle, Gable)
Nay-0
Absent-1(Deal)

APPROVAL OF AGENDA

Chairman Miller called for additions and/or corrections to the August 16, 2011, agenda.

County Manager Geouque requested to add a vehicle bid award request and grant acceptance award request (to be presented by Mr. Joe Furman) as additions to Item # 14; and possible action after closed session regarding a settlement agreement.

Vice-Chairman Blust, seconded by Commissioner Gable, moved to approve the August 16, 2011, agenda as amended.

VOTE: Aye-4(Miller, Blust, Futrelle, Gable)
Nay-0
Absent-1(Deal)

OUT-OF-STATE TRAVEL REQUEST

Sherriff Hagaman and Captain Rominger were not present; therefore, the Board, by consensus, tabled this request to a future meeting.

WATAUGA OPPORTUNITIES, INC., UPDATE

Mr. Michael Maybee presented an overview of services provided by Watauga Opportunities, Inc. (WOI) and invited Board members to visit and tour the WOI facilities.

The presentation was provided for information only; therefore, no action was required.

FORESTRY SERVICES FUNDING REQUEST FOR NEW ATTACK VEHICLE

County Ranger Mark Hildebran, along with District Ranger Brent Triplett and District Mechanic Danny Hayes with the North Carolina Forest Service, requested the County's assistance with the purchase of a new attack vehicle. The State Forestry Service had originally planned to replace the vehicle in Fiscal Year 2013; however, do to its age and maintenance/repair issues, the vehicle replacement should have been included in the current year budget. Mr. Hayes reviewed some of the mechanical issues that plagued the current vehicle. Mr. Hildebran requested the County provide $12,000 (40%) in the current budget toward the purchase of the new vehicle.

Commissioner Gable stated that he preferred a local purchase, if possible. Mr. Hildebran stated this vehicle was required to be purchased under the state contract.

County Manager Geouque stated that funds were available in the administrative contingency budget line.

Commissioner Gable, seconded by Commissioner Futrelle, moved to approve the purchase of a new attack vehicle for the County Forest Ranger and approved to fund 40% of the purchase, not to exceed $12,000, with funding to be allocated from the administrative contingency budget line.

VOTE: Aye-4(Miller, Blust, Futrelle, Gable)
Nay-0
Absent-1(Deal)

HIGH COUNTRY SOCCER ASSOCIATION REQUEST TO DEVELOP AND UTILIZE A PRACTICE FIELD AT THE BROOKSHIRE COMPLEX

Mr. Kiki Wallace, Director of Coaching, with High Country Soccer Association (HCSA), requested permission to create a practice field adjacent to the Ted Mackorell Soccer Complex. Mr. Wallace stated that, due to a boom of interest in soccer, the HCSA needed additional field space in the fall as the fields were shared with County Parks and Recreation programs during that time.

County Manager Geouque stated that, when planning the complex, the grassy area was intended to be used for a practice/game field. However, funds were not and are still not available to complete the area as designed.

Mr. Wallace stated that HCSA would be responsible for the development of the practice field and all associated maintenance, repairs, and cleaning. Mr. Wallace also requested, that at the expense of the HCSA, a fence be placed around the practice field and gravel be brought in to provide additional parking.

The County Manager shared a map detailing the proposed area and stated that the property was in the Town of Boone limits and, therefore, the HCSA would have to request permits from the Town to add the fence. The permit applications would be signed by the County as the property owner.

Commissioner Futrelle, seconded by Vice-Chairman Blust, moved to approve the request for High Country Soccer Association to develop a grass practice field on County-owned property located adjacent to the Ted Mackorell Soccer Complex with the High Country Soccer Association to be responsible for all costs associated with the development (including permit fees), maintenance, and upkeep of the field and to direct the County Attorney to prepare the appropriate documents.

VOTE: Aye-4(Miller, Blust, Futrelle, Gable)
Nay-0
Absent-1(Deal)

COOPERATIVE EXTENSION UPDATE

Ms. Meghan Baker, Agricultural Extension Agent with the Cooperative Extension, presented a report on the Christmas tree industry and horticulture in the County. Ms. Baker stated that she

worked closely with the Christmas Tree Association and the Choose and Cut Program. Christmas tree sales were up in Watauga County by 10% this past year compared to the previous year. Ms. Baker shared a brochure recently published using funding from the Watauga County Tourism Development Authority and stated that promotion for the tree industry was provided through trade shows and local television as well.

The report was provided for information only; therefore, no action was required.

WATAUGA COUNTY FARMLAND PRESERVATION PLAN REVIEW COMMITTEE UPDATE

Mr. Jim Hamilton, Cooperative Extension Director and Coordinator of the Watauga County Farmland Preservation Plan Review Committee, provided an update on the Committee's review of the plan to date. Mr. Hamilton reviewed general notes made by the Committee; parts of the plan that the Committee felt needed editing and amending; and potential actions that could be recommended by the Committee in the future. Mr. Hamilton stated that the Committee's next goal was to review the Plan page-by-page and bring recommendations back to the Board of Commissioners.

This report was provided for information only; therefore, no action was required.

BID AWARD REQUEST FOR NEW WHEEL LOADER

Mr. J. V. Potter, Operation Services Manager, stated that the Sanitation Department had solicited bids for a new wheel loader to be used at the transfer station. The loaders were typically replaced every five years with the new loader replacing a 2005 model. The following three bids were received:

Bidder	Amount
Carolina Tractor	$220,408
James River Equipment	$223,515
Linder	$226,700

Mr. Potter recommended awarding to the low bidder, Carolina Tractors, in the amount of $220,408. The purchase of the wheel loader is included in the current Sanitation Department budget.

Commissioner Futrelle, seconded by Commissioner Gable, moved to award the bid for the purchase of a new wheel loader to Carolina Tractor in the amount of $220,408 with funds to be allocated from the Sanitation Department's current budget.

VOTE: Aye-4(Miller, Blust, Futrelle, Gable)
Nay-0
Absent-1(Deal)

TAX MATTERS

A. Annual Settlement of Tax Collector

Tax Administrator Byrd presented the following Annual Settlement Statements for Fiscal Year 2010/2011 for Board approval:

TO BE TYPED IN MINUTE BOOK

Vice-Chairman Blust, seconded by Commissioner Gable, moved to approve the Annual Settlement Statements for Fiscal Year 2011.

VOTE: Aye-4(Miller, Blust, Futrelle, Gable)
Nay-0
Absent-1(Deal)

B. Oath to Collect Taxes

Mr. Byrd presented a proposed Order granting authorization to collect taxes for Fiscal Year 2012. Once approved, a sworn oath was to be administered to Tax Administrator Byrd.

Commissioner Gable, seconded by Vice-Chairman Blust, moved to grant authorization for Tax Administrator Byrd to collect taxes for Fiscal Year 2012.

VOTE: Aye-4(Miller, Blust, Futrelle, Gable)
Nay-0
Absent-1(Deal)

MAINTENANCE MATTERS

A. Discussion of Custodial Services and Potential Bid Award Request

Mr. Robert Marsh, Maintenance Director, stated that, at the August 2, 2011, meeting, the Board tabled consideration of the custodial service contracts and requested that staff continue to review options available as well as the proposals submitted. Mr. Marsh offered the following four (4) options for consideration:

Option 1: Award a full service contract to IH Services with a three (3) year rate lock of $119,450 annually. This option also included an alternate choice in the amount of $86,827; however, weekend custodial services to parks and recreation facilities would be omitted from the contract if this alternate were chosen.

Option 2: Provide full custodial services through the County's Maintenance Department at a cost of $154,159 annually. This option would require hiring four (4) additional Custodian II positions as well as part-time workers and would include the cost of equipment.

Option 3: Provide full custodial services through the County's Maintenance Department; however, with this option, weekend custodial services to parks and recreation facilities would be discontinued.

Option 4: Provide full custodial services through the County's Maintenance Department, including weekend services to parks and recreation facilities in the amount of $77,080 annually. This option requires reassigning two (2) Maintenance Technicians positions to Custodian II positions and provides the same level of custodial services listed in Option 1 and Option 2; however, a reduction in the level of building maintenance services would occur.

Mr. Marsh stated that he and the County Manager recommended choosing either Option 1 or Option 4. Option 1 afforded the County a fixed cost for three (3) years and provided the level of service required. Option 4 allowed the least impact on the budget but with a reduction in the level of building maintenance services.

After discussion, Vice-Chairman Blust, seconded by Commissioner Futrelle, moved to accept Option 4 and reassess services provided in January 2012.

VOTE: Aye-4(Miller, Blust, Futrelle, Gable)
Nay-0
Absent-1(Deal)

B. Office Renovation Bid Award Request

Mr. Marsh presented bids associated with renovation work required as a result of the relocation of the License Plate Agency (LPA) to the East Annex. The following two (2) bids were received:

Bidder	**Amount**
Dallas Lawrence Construction	$23,802
Houck Contracting, LLC	$18,141

Mr. Marsh stated that he was satisfied with past work done by Houck Contracting and recommended accepting their low bid in the amount of $18,141.

Vice-Chairman Blust, seconded by Commissioner Gable, moved to award the bid for minor office renovations to Houck Contracting, LLC, in the amount of $18,141 with funds to be allocated from the costs savings realized by no longer leasing space for the License Plate Agency and, if needed, the administrative contingency budget line.

VOTE: Aye-4(Miller, Blust, Futrelle, Gable)
Nay-0
Absent-1(Deal)

PROPOSED AGREEMENT FOR REIMBURSEMENT AUDIT OF SOCIAL SERVICES' PROGRAMS

Ms. Margaret Pierce, Finance Director, present a proposal from MAXIMUS Consulting Services, Inc. to audit the Department of Social Services records to determine if the County was recovering all costs as entitled from federal and state programs. The cost of the audit services was $8,900 with funds budgeted in administrative financial budget for the current fiscal year. Ms. Pierce stated that transportation costs would be shared with High Country Council of Governments as they were utilizing MAXIMUS services during the same time frame.

County Manager Geouque stated that it had been over ten years since such an audit had been performed and with recent personnel turnovers within the Department of Social Services the audit would provide training to staff and the potential for cost savings.

Commissioner Futrelle, seconded by Vice-Chairman Blust, moved to approve the contract with MAXIMUS, in the amount of $8,900, for audit services at the Department of Social Services, contingent upon the County Attorney's review.

VOTE: Aye-4(Miller, Blust, Futrelle, Gable)
Nay-0
Absent-1(Deal)

REQUEST FOR ADDITIONAL DATES TO SCHEDULE THE NORTH CAROLINA EMERGENCY MANAGEMENT TRAINING

Mr. Joe Furman stated that, at the August 2, 2011, meeting, the Board scheduled an Emergency Management Training for September 20, 2011, at 3:00 PM. Unfortunately, the only date available for the State to provide the training was September 22, 2011. The grant funding required that the training be conducted prior to the end of the federal fiscal year on September 30, 2011, if not; the County would lose approximately $2,246.

By consensus, the Board agreed to reschedule the training for September 22, 2011, from 11:00 A.M. to 1:00 P.M.

VEHICLE BID AWARD REQUEST

Mr. Furman presented the bids from Light-N-Up, LLC, in the amount of $24,225, and Bobby Jones' Ford, in the amount of $24,936.25 for a new F-150 truck for the Emergency Management office. Mr. Furman stated that Boone Ford did not give a state-contract bid. Sufficient funds were budgeted for the purchase of the vehicle. Mr. Furman stated that two higher-mileage vehicles were planned to be surplused for use by other County Departments which would leave two vehicles, including the F-150 truck, for Emergency Management use. Mr. Furman detailed the bid process used and stated that the vehicle had to be ordered by the end of the week to take advantage of the bid price. Mr. Furman recommended awarding the bid to the low bidder, Light-N-Up, LLC, in the amount of $24,225, for a turn-key F-150 truck.

Commissioner Gable stated that he preferred local vendors and Chairman Miller suggested that, in the future, bid proposals be offered to local dealerships even if they did not recognize the state contract price.

After discussion, Vice-Chairman Blust, seconded by Commissioner Futrelle, moved to award the bid for the purchase of the F-150 truck to the low bidder, Light-N-Up, LLC, in the amount of $24,225, as presented by Mr. Furman.

VOTE: Aye-4(Miller, Blust, Futrelle, Gable)
Nay-0
Absent-1(Deal)

TRAINING EXERCISE GRANT AWARD ACCEPTANCE REQUEST

Mr. Furman stated that the North Carolina Emergency Management grant application which was approved at the June 28, 2011, regular meeting had been awarded to fund an active shooter training exercise. Mr. Furman presented a contract with C3 Applications, LLC, to develop and design the exercise.

Emergency Management Coordinator, Steve Sudderth, stated that the Sheriff's Office and Watauga Medical Center had recommended C3 Applications. The only cost to the County would be time spent by personnel for the training.

Commissioner Futrelle, seconded by Commissioner Gable, moved to accept the grant funds and approve the contract with C3 Applications, LLC, contingent upon the County Attorney's review.

VOTE: Aye-4(Miller, Blust, Futrelle, Gable)
Nay-0
Absent-1(Deal)

PUBLIC HEARINGS TO ALLOW CITIZEN COMMENT

A. Rural Operating Assistance Program (ROAP)

Chairman Miller declared the public hearing open at 6:21 P.M. to allow for comment on AppalCART's application for funding through the FY 2012 Rural Operating Assistance Program (ROAP). Mr. Chris Turner, AppalCART's Director, reviewed the previous allocation amounts and discussed recommendations for the County's $131,048 allocation for FY 2012.

There being no public comment, Chairman Miller declared the public hearing closed at 6:24 P.M.

Commissioner Futrelle, seconded by Commissioner Gable, moved to approve the submission of the FY 2012 Rural Operating Assistance Program (ROAP) grant application and the execution of the certified statement as presented by Mr. Turner.

VOTE: Aye-4(Miller, Blust, Futrelle, Gable)
Nay-0
Absent-1(Deal)

B. Closeout of the Community Development Block Grant (CDBG) for the Hospitality House Construction Project

Chairman Miller stated that a public hearing had been scheduled to allow citizen comment on the close-out procedure of Community Development Block Grant (CDBG) #08-C-1881, Hospitality House. The County received $600,000 in CDBG funds which was contributed towards construction of the new Hospitality House, now complete and in use. The purpose of the hearing was to assess the County's performance administering the grant funds.

Chairman Miller declared the public hearing open at 6:25 P.M.

There being no public comment, Chairman Miller declared the public hearing closed at 6:25 P.M.

Commissioner Futrelle, seconded by Chairman Miller, moved to approve the close-out of the Community Development Block Grant (CDBG) #08-C-1881, Hospitality House.

VOTE: Aye-4(Miller, Blust, Futrelle, Gable)
Nay-0
Absent-1(Deal)

C. Road Names

Chairman Miller stated that a public hearing had been scheduled to allow citizen comment on the new private and public road names as follows: names for new roads - Buck Mountain Road, Quarry Road, Community Lane, Woodrow Street, Genevieve Lane, Paws Way, Red Tail Summit, Siano Lane, Timberwolf Trail, Vineyard Lane; and name changes for existing roads - from Castle Lane to Clark Castle Lane, from Valley View Road to Autumn View Lane, and from Chestnut Drive to Old Chestnut Road. The public hearing is required by N.C.G.S. 153A-239.1 and Board action was requested to approve the road names as submitted.

Chairman Miller declared the public hearing open at 6:26 P.M.

There being no public comment, Chairman Miller declared the public hearing closed at 6:27 P.M.

Commissioner Futrelle, seconded by Commissioner Gable, moved to adopt the road names as submitted.

VOTE: Aye-4(Miller, Blust, Futrelle, Gable)
Nay-0
Absent-1(Deal)

BOARD OF EDUCATION REQUEST TO RELEASE FUNDS FOR NEW HIGH SCHOOL CONSTRUCTION PROJECT

County Manager Geouque stated that, at the August 2, 2011, meeting, the Board tabled releasing the $345,031.75 owed to Barnhill/Vannoy until an update could be provided regarding the roof repair at the high school. The County Manager stated that the original contractor did not place a bid on the repair job as the job was small and, so far, only one quote had been obtained. The County Manager stated that staff had contacted the County's insurance provider to inform them that, once the estimate was received, the repair would be scheduled as soon as possible; however, at this time, additional quotes were being sought.

By consensus, the Board agreed to table action on the request to release the funds.

MISCELLANEOUS ADMINISTRATIVE MATTERS

A. Letter of Support Request from W.A.M.Y. Community Action

County Manager Geouque presented a draft letter supporting W.A.M.Y. Community Action, Inc. in an application for Housing Preservation Grant funds from the U.S. Department of Agriculture, Rural Development Division.

Commissioner Futrelle, seconded by Vice-Chairman Blust, moved to approve the letter of support for W.A.M.Y. Community Action, Inc.'s, application for Housing Preservation Grant funds from the U. S. Department of Agriculture, Rural Development Division as presented.

VOTE: Aye-4(Miller, Blust, Futrelle, Gable)
Nay-0
Absent-1(Deal)

B. Appointments to High Country Regional Bike Plan Steering Committee

County Manager Geouque stated that appointments to the High Country Regional Bike Plan Steering Committee were previously tabled. The appointment request was for three members to represent Watauga County on a Steering Committee for a Regional Bike Plan which the North Carolina Department of Transportation had contracted with High Country Council of Governments to develop. The purpose of the plan was to improve safety, access, and mobility for cyclists by identifying road improvements and providing signage to mark the designated routes.

In addition to Dan Scagnelli and Eric Woolridge, who were recommended at the August 2, 2011, meeting, Chairman Miller recommended Dan Klinedist.

Commissioner Futrelle, seconded by Commissioner Gable, moved to appoint Dan Klinedist, Dan Scagnelli, and Eric Woolridge to serve as Watauga County representatives on the High Country Regional Bike Plan Steering Committee.

VOTE: Aye-4(Miller, Blust, Futrelle, Gable)
Nay-0
Absent-1(Deal)

C. Boards and Commissions

County Manager Geouque stated that Ms. Shannon Wooten had resigned from the Watauga County Economic Development Commission. Her term was set to expire June 30, 2013. The Commission had recommended that Ms. Jeannine Underdown Collins be appointed to fill the unexpired term.

Vice-Chairman Blust, seconded by Commissioner Gable, moved to waive the second reading and appoint Ms. Jeannine Underdown Collins to fill the unexpired term.

VOTE: Aye-4(Miller, Blust, Futrelle, Gable)
Nay-0
Absent-1(Deal)

County Manager Geouque stated that the terms of Ms. Sarah Mast and Ms. Susan Mast, both on the Valle Crucis Historic Preservation Commission, were set to expire in September. Both were willing to continue to serve an additional three-year term, if reappointed. The Commission consisted of five members, three of which must be resident property owners of the Valle Crucis Historic District and two of which must be members of the Valle Crucis Community Council. The two terms being considered for appointment fall under the "resident property owners" category.

Commissioner Gable, seconded by Vice-Chairman Blust, moved to waive the second reading and reappoint Ms. Sarah Mast and Ms. Susan Mast to three-year terms on the Valle Crucis Historic Preservation Commission with both terms to expire in September 2014.

VOTE: Aye-4(Miller, Blust, Futrelle, Gable)
Nay-0
Absent-1(Deal)

County Manager Geouque stated that, at the November 16, 2011, Board meeting, William Winkler, III, was appointed to fill an unexpired term on the Caldwell Community College & Technical Institute (CCC&TI) Board of Trustees. That term has since expired and Mr. Winkler may be reappointed, if so desired.

Commissioner Futrelle, seconded by Vice-Chairman Blust, moved to waive the second reading and reappoint Mr. William Winkler, III, to a four-year term on the Caldwell Community College and Technical Institute Board of Trustees.

VOTE: Aye-4(Miller, Blust, Futrelle, Gable)
Nay-0
Absent-1(Deal)

County Manager Geouque stated that he served on the Management Committee for the Ted Mackorell Soccer Complex (TMSC); however the agreement between the County, Appalachian State University (ASU), and the High Country Soccer Association (HCSA) stated that, *"In the event the affirmative vote of at least four (4) members of the Management Committee is incapable of being obtained, then any controversy or claim arising out of or relating to this Agreement or the operation of the Joint Venture shall be submitted to the Watauga County Manager, and the President of HCSA."* Since he now serves as the County Manager, Mr. Geouque requested that Watauga County Maintenance Director, Robert Marsh, be appointed as the County's representative on the Ted Mackorell Soccer Complex Management Committee.

Commissioner Gable, seconded by Vice-Chairman Blust, moved to appoint Robert Marsh as a member of the Ted Mackorell Soccer Complex Management Committee.

VOTE: Aye-4(Miller, Blust, Futrelle, Gable)
Nay-0
Absent-1(Deal)

D. Announcements

County Manager Geouque announced that the North Carolina Department of Transportation (NCDOT) was holding a Local Officials Informational Meeting on Monday, August 22, 2011, at 1:00 P.M. regarding the proposed widening and improvements to Hwy 105 from US 221 in Linville to SR 1107 (NC Hwy 105 Bypass) in Boone, Avery and Watauga Counties (R-2566). The meeting would be held at the Foscoe Grandfather Community Center in Banner Elk.

County Manager Geouque announced that the NCDOT would also be holding three Citizen's Informational Workshops regarding Project R-2566. The first would be immediately following the Local Officials Informational meeting on August 22. The second Workshop was scheduled for Monday, August 29, 2011, at the Linville Volunteer Fire Department and the third on Tuesday, August 30, 2011, at the La Quinta Inn & Suites in Boone. The Workshops were each scheduled from 4:00 P.M. to 7:00 P.M.

County Manager Geouque announced that the Hospitality House Board of Directors invited the Board to attend the 6th Annual Food and Shelter for Hope Luncheon on Thursday, August 25, 2011, at 11:30 A.M. at the Broyhill Inn and Conference Center.

County Manager Geouque announced that Smoky Mountain Center invited the Board to attend the following upcoming events: a celebration in honor of their selection in the Medicaid Waiver Expansion Initiative scheduled for Thursday, August 25, 2011, at 10:00 A.M. and an

informational meeting entitled, "Medicaid Waiver 101" scheduled for Thursday, September 8, 2011, from 4:00 P.M. to 6:00 P.M. Both events would be held at the Smoky Mountain Center Administrative Office in Sylva.

County Manager Geouque announced that a public hearing was scheduled for Tuesday, August 30, 2011, at Green Valley Elementary School beginning at 7:00 P.M. to allow comment on the proposed water supply reclassification of the South Fork of the New River. In addition to the public hearing, written comments addressing the proposed reclassification of the South Fork could be submitted to Elizabeth Kountis with the North Carolina Department of Environment and Natural Resources – Division of Water Quality, Planning Section. Written comments would be accepted until September 30, 2011.

County Manager Geouque announced that Register of Deeds JoAnn Townsend invited the Board to attend the Opening Banquet for the 59th Annual North Carolina Association of Register of Deeds Conference which will be held September 10-13, 2011, on the campus of Appalachian State University. The Banquet is scheduled for Sunday, September 11, 2011, at 6:30 P.M.

County Manager Geouque announced that the High Country Council of Governments Annual Banquet was scheduled for Friday, September 9, 2011, at Linville Ridge Clubhouse with a reception beginning at 6:00 P.M., dinner at 7:00 P.M., and the presentation of awards at 8:00 P.M.

PUBLIC COMMENT

There was no public comment.

CLOSED SESSION

At 6:42 P.M., Vice-Chairman Blust, seconded by Commissioner Gable, moved to enter Closed Session to discuss Attorney/Client Matters, per G. S. 143-318.11(a)(3) and Economic Development Matters, per G. S. 143-318.11(a)(4).

VOTE: Aye-4(Miller, Blust, Futrelle, Gable)
Nay-0
Absent-1(Deal)

Vice-Chairman Blust, seconded by Commissioner Gable, moved to resume the open meeting at 7:23 P.M.

VOTE: Aye-4(Miller, Blust, Futrelle, Gable)
Nay-0
Absent-1(Deal)

POSSIBLE ACTION AFTER CLOSED SESSION – SETTLEMENT AGREEMENT

Vice-Chairman Blust, seconded by Commissioner Gable, moved to accept a general release agreement pursuant to a personnel matter in the amount of $20,000, as presented.

VOTE: Aye-4(Miller, Blust, Futrelle, Gable)
Nay-0
Absent-1(Deal)

ADJOURN

Commissioner Futrelle, seconded by Chairman Miller, moved to adjourn the meeting at 7:25 P.M.

ATTEST:

Nathan A. Miller, Chairman

Anita J. Fogle, Clerk to the Board

AGENDA ITEM 3:

APPROVAL OF THE SEPTEMBER 6, 2011, AGENDA

Blank Page

AGENDA ITEM 4:

SHERIFF'S OFFICE MATTERS

A. Out-of-State Travel Request

MANAGER'S COMMENTS:

Sherriff Hagaman will present a request for out-of-state travel for Captain Rominger to attend a workshop on forensic interviewing of children. Board approval is requested.

Blank Page

8-16-2011 Agenda

Watauga County Sheriff s Office

184 Hodges Gap Road
Boone, NC 28607
828-264-3761- 828-265-7617

Len D. Hagaman, Jr.
Sheriff

Training Request

Name: Dee Dee Rominger Date of Request: August 1, 2011

Division: Investigations Division Commander: Captain Dee Dee Rominger

I request to attend the following education/training: Forensic Interviewing of Children

This training will be held by: (School/Institution) National Children's Advocacy Center Huntsville, Alabama

Date/Time Begins: October 24, 2011 Date/Time Ends: October 28, 2011

Does this training specifically relate to your current assignment? (YES) NO Other (Explain)

Signature: Dee Dee Rominger

Approved: ☐ Denied: ☐ Approval Pending ☐

First Level Supervisor: _____ Date: _____

Approved: ☐ Denied: ☐ Approval Pending ☐

Division Commander: _____ Date: _____

Approved: ☑ Denied: ☐ Approval Pending ☐

(Sheriff) or (Designee): Len Hagaman Jr Date: 8-1-11

WATAUGA COUNTY
TRAVEL AUTHORIZATION & TRAVEL ADVANCE REQUEST

	Date:	8/1/2011	Budget Account Number	104310-431200

Name:	Title:	Department:
Dee Dee Rominger	Investigation Captain	Watauga County Sheriff's Office

DESTINATION:	Meeting Dates:
Huntsville, Alabama	October 24, 2011 to October 28, 2011

X	Yes	Is this out of State Travel? If yes, Board of County Commissioners approval is required and MUST be signed by the County Manager	DEPARTURE DATE:	10/23/2011	RETURN DATE:	10/28/2011
	No		TIME: AM	10:00 PM	TIME: AM	PM 11:00

Purpose of Trip:

X	Yes	Overnight Accommodations Required?						
	No							
X	Yes			Rate per night/person				$ 95.00
	No	Holiday Inn						

Method of Transportation:	Cost		County Vehicle	X	Personal Vehicle		Air	
	Other	Explanation:						

Estimated Expenses				Totals
*REGISTRATION FEES: Please indicate meals and/or banquets included in registration fee				$ 1,049.00
MEALS:	Breakfast	$ 8.00		$ -
	Lunch	$ 10.00	1	$ 10.00
	Dinner	$ 16.00	6	$ 96.00
LODGING:	Single Rate	$95.00	5	$ 475.00
Other:				$ -
	TOTALS			$ 1,630.00

*Receipts Required for Reimbursement

Remarks:

To be paid from Drug Fund - Fund 23

Yes / No — Are funds requested in advance:	If settlement has not been made on this advance within 20 working days after completion of travel, I authorize this amount to be deducted from my next paycheck	I believe this trip to be necessary and beneficial to Watauga County and funds were provided for this purpose in this departments appropriate budget account.
Yes / No — Form is Mathematically Correct	Dee Dee Rominger	
Finance Staff	Employee	Department Head or County Manager
Date	8/1/2011 Date	Date 8-1-11

Forensic Interviewing of Children
National Children's Advocacy Center
October 24-28, 2011

Attendee Information (Please print):

Name: Dee Dee Rominger

Agency: Watauga County Sheriff's Office

Address: 184 Hodges Gap Road

City: Boone State: NC Zip 28607

Daytime phone: 828-265-7604 Email(required): dee.rominger@watgov.org

Discipline: Please check the most appropriate.

☐ CPS ☑ Law Enforcement ☐ Mental Health ☐ Medical ☐ Legal ☐ Victim Advocate ☐ Forensic Interviewing ☐ Other: _____

What is your Job Title? Investigation Captain

Are you a member of a multi-disciplinary Team? ☐ Yes ☐ No

Are you affiliated with a CAC? ☑ Yes ☐ No If Yes, which CAC? Boone, NC

Training Rate:

☑ On or before September 26, 2011 — $1049 (payment must be **received** by September 26 to receive this rate)

☐ After September 26, 2011 — $1149

Method of Payment:

☐ Check or money order enclosed. Please make checks payable to NCAC.

☐ Credit card:

☐ Visa ☐ Mastercard ☐ American Express

Expiration date:_____ Card #:_____ Signature:_____

Please send this form and payment to:

Mail: National Children's Advocacy Center
Attn: Ann Leith
210 Pratt Avenue
Huntsville, AL 35801

Fax: 256-327-3859 (credit card only)

Online: www.nationalcac.org

Cancellation Policy: Written cancellations received at least 30 days prior to the beginning of each training session will be refunded, less a $100 administrative fee. Registration is transferable. No refunds will be made if cancellation is received within 30 days of the training session.

IMPORTANT: Training classes are subject to cancellation in the event of insufficient registrations. Therefore, DO NOT make non-refundable travel arrangements until you receive a **Final Confirmation** of your registration from NCAC (approximately 4 to 6 weeks before the training). In the event of cancellation due to insufficient registrations, 100% of the registration fee will be refunded.

Questions? Contact Ann Leith at 256-327-3746 or at aleith@nationalcac.org

The 27th National Symposium on Child Abuse in Huntsville, AL. March 28-31, 2011. Click for more information...

Forensic Interviewing of Children 2011

Huntsville, AL

This training is specifically designed for child interviewers who have responsibility for initial investigative/forensic interviews of children. It is appropriate for professionals from the fields of child protective services, law enforcement, and those affiliated with a Children's Advocacy Center (CAC) **with less than one year of full-time experience**. The National Training Center has provided child interviewing training since 1999.

In this course, the attendee will experience immersion in the latest research-based information on interviewing techniques, taught by nationally recognized trainers; opportunities to develop and refine interviewing skills during a videotaped child interviewing exercise with a "real kid" from our community; the chance to observe and participate in a mock court scenario, which will demonstrate concepts related to providing effective testimony in child abuse cases. Additional topics to be covered are the NCAC Forensic Interview Structure, forensic questioning, developmental issues, interview strategies, memory and suggestibility, interviewing tools, and expert witnesses. Each participant will receive a notebook of resource materials, a copy of his/her videotaped child interview practicum, and the opportunity to network with colleagues from across the country.

Registration Fees:	Early Registration Fee: $1049	Standard Registration Fee: $1149
February 7-11, 2011	Class Complete	Class Complete
April 11-15, 2011	Class Complete	Class Complete
June 13-17, 2011	Class Complete	Class Complete
July 18-22, 2011	Class Complete	Class Complete
September 19-23, 2011	Payment received by August 22	After August 22
October 24-28, 2011	Payment received by September 26	After September 26
December 5-9, 2011	Payment received by November 7	After November 7

CEUs will be available. More about CEUs

Register Early -- Slots are limited and classes often fill early!

IMPORTANT NOTE: Training classes are subject to cancellation in the event of insufficient registrations. Therefore, DO NOT make non-refundable travel arrangements until you receive both a "Preliminary Registration" e-mail AND a "Final Confirmation" e-mail from NCAC that the training will take place (approximately 4 to 6 weeks before the training). In the event of cancellation due to insufficient registrations, 100% of the registration fee will be refunded.

For more information, contact Ann Leith at aleith@nationalcac.org or at 256-327-3746.

General Information:
Participants are responsible for transportation to Huntsville, lodging, and some meals.

Lunches are provided daily during the training.

Click the link below to take advantage of the **Holiday Inn's special rate of $95** which includes breakfast and free transportation to and from the hotel.
Hotel Information

Cancellation Policy: Written cancellations received at least 30 days prior to the beginning of the training session will be refunded less a $100 administrative fee. Registration is transferable. No refunds will be made if cancellation is received within 30 days of the training session.

APSAC Advisor Volume 15, Number 4, Fall 2003
NCAC's Child Forensic Interview Structure by Linda Cordisco Steele, MEd, LPC
Posted by permission of the American Professional Society on the Abuse of Children, 940 NE 13th Street, TCH 3B3406, Oklahoma City, OK 73104

REGISTER FOR TRAINING

Dates	Online Registration	Printable Registration Form
February 7-11,2011	Class Complete	Class Complete
April 11-15, 2011	Class Complete	Class Complete
June 13-17, 2011	Class Complete	Class Complete
July 18-22, 2011	Class Complete	Class Complete
September 19-23, 2011	Online Registration	Print Registration Form
October 24-28, 2011	Online Registration	Print Registration Form
December 5-9, 2011	Online Registration	Print Registration Form

The 27th National Symposium on Child Abuse in Huntsville, AL. March 28-31, 2011. Click for more information...

Hotel Information 2010

Host Hotel Information for the 2011 Training Session

Holiday Inn Huntsville –Research Park Location

5903 University Drive
Huntsville, Alabama 35806
256-830-0600 or 800-845-7275

Rate: $95 (plus tax, if applicable)*

Register Online at www.ichotelsgroup.com/h/d/hi/1/en/hotel/hsvrp?_requesid=562430

By Phone at 256-830-0600

***In order to make reservations at this rate, it is recommended that you contact the hotel directly prior to three weeks of the training date, and ask for the block of rooms reserved for "NCAC"**

NOTE: Transportation to and from the hotel & training site is provided each day by the Holiday Inn Research Park.

Google maps

To see all the details that are visible on the screen, use the "Print" link next to the map.

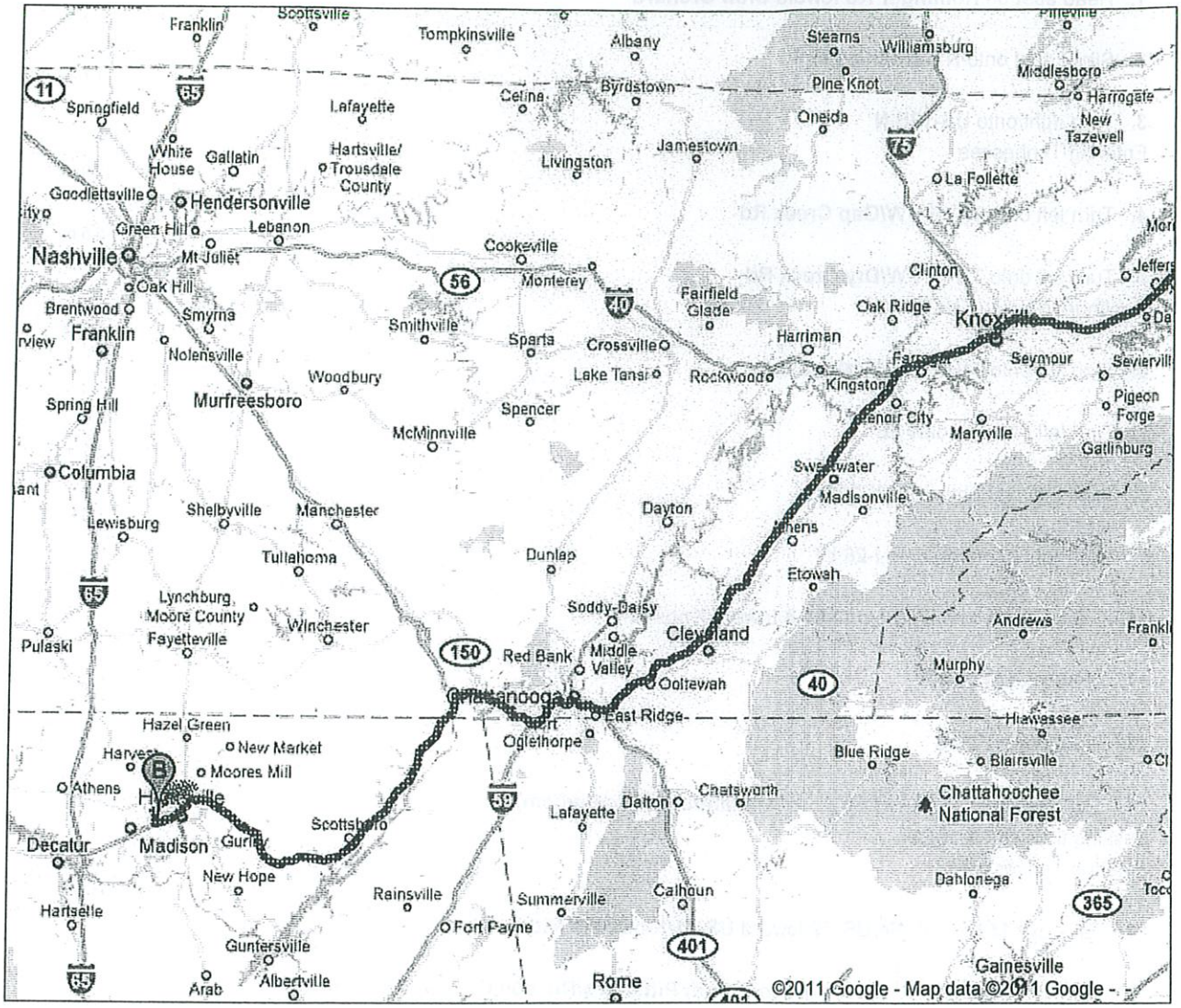

Driving directions to 5903 University Dr NW, Huntsville, AL 35805

985 Rominger Rd
Banner Elk, NC 28604

1. Head **east** on **Rominger Rd** toward **Crab Orchard** — 0.9 mi
2. Slight right onto **N Carolina 194 S** — 11.1 mi
3. Turn right onto **US-19E N**
Entering Tennessee — 17.0 mi
4. Turn left onto **TN-361 W/Gap Creek Rd** — 2.5 mi
5. Turn left onto **TN-361 W/Dry Creek Rd**
Continue to follow TN-361 W — 6.3 mi
6. Turn left onto **TN-359 S/Okolona Rd** — 1.4 mi
7. Turn left onto **S Roan St** — 0.2 mi
8. Take the 1st right onto **TN-359 S** — 341 ft
9. Turn right to merge onto **I-26 W** — 18.5 mi
10. Take exit **8A** to merge onto **I-81 S** toward **Knoxville** — 57.1 mi
11. Merge onto **I-40 W** — 36.1 mi
12. Merge onto **I-75 S** — 100 mi
13. Slight right onto **I-24 W** (signs for **Chattanooga/Birmingham**)
Passing through Georgia
Entering Tennessee — 33.7 mi
14. Take exit **152** for **US-64/US-72** toward **US-41/Kimball/S Pittsburg** — 0.1 mi
15. Keep right at the fork, follow signs for **South Pittsburg/Russell Cave/Nati Monument** and merge onto **US-72 W**
Entering Alabama — 71.0 mi
16. Continue onto **I-565 W** — 7.3 mi
17. Take exit **14B** for **AL-255 N/Research Park Blvd** — 0.3 mi
18. Merge onto **AL-255 N/Research Park Blvd NW** — 2.2 mi
19. Merge onto **US-72 W/University Dr NW** via the ramp to **Athens** — 0.5 mi
20. Make a U-turn at **Perimeter Pkwy NW**
Destination will be on the right — 0.4 mi

5903 University Dr NW
Huntsville, AL 35805

These directions are for planning purposes only. You may find that construction projects, traffic, weather, or other events may cause conditions to differ from the map results, and you should plan your route accordingly. You must obey all signs or notices regarding your route.

AGENDA ITEM 4:

SHERIFF'S OFFICE MATTERS

B. Repeater Site Upgrades Request

MANAGER'S COMMENTS:

Captain Virginia will present a bid for $69,843 from Wireless Communications for upgrades to the repeater sites to be compliant with the 2013 narrow banding mandates. The reason for only one bid is due to the sole source nature of the equipment. Based on the Sheriff's Office recommendation, this is the only product available that meets their performance objectives and operational needs and has no compatibility issues or negative operational impacts.

Adequate funds have been budgeted to cover the expenditure. Board action is requested

Blank Page

Watauga County
Repeater Site Upgrades
Justification

With the narrow banding mandates of the FCC and the need to upgrade the repeater sites that contain aged and non compliant equipment, we have found that both the Green Hill repeater site and the Wildcat repeater site will need to have complete upgrades of equipment. This equipment is aged and to be able to become compliant and they must be replaced with new compliant equipment.

Watauga County has set the target of June 2012 to come into compliance with all frequencies and equipment. The purchase of this equipment will bring all sites into the 2013 mandated requirements including the back room/console equipment in the communications center which consists of card cages, additional cards and power supplies to support the compliant control stations and the ability to expand to future requirements. In this figure there is also an additional console position.

As a note, there will be costs associated with the re-banding and frequency changes that will be incurred by all of the county fire departments. These charges may not be limited to the reprogramming of both compliant mobile and portable radios and responder pagers.

Wireless Communications, In
4800 REAGAN DRIVE
CHARLOTTE, NC 28206

Quotation

Quote Number: 1
Consultant: Randy Heaton
Date of Quote: August 24, 2011

Customer:
Watauga County Sheriff's Dept
184 Hodges Gap Road
Boone, North Carolina
Attn. Captain Jeff Virginia
ph 828-265-6900
e-mail:

Tax Exempt Number:

TERMS: Net 30 days ARO
SHIP: best way
Page 1

Ship To:
Same
ph. 828-455-2904
e-mail rheaton@wirelessnc.com

Line	Qty.	Model number	Description	unit price	extended
1a	1	T3000	MTR3000 base radio	$2,884.00	$2,884.00
1b	1	X330MT	VHF 100watts 136-174mhz	$2,650.00	$2,650.00
1c	1	X265VH	Preselector VHF	$231.00	$231.00
1d	1	X216AR	4 wire wireline	$312.00	$312.00
1e	1	X371BA	Antenna relay	$199.00	$199.00
1f	1	X153BA	Rack mount hardware	$75.00	$75.00
1g	1	X347AF	Install manual and user guide	$0.00	$0.00
2	1	440-1	Antenna dipole 6db 150-162mhz	$693.00	$693.00
3	1	477944	Mount, side arm 24" tapered leg	$225.00	$225.00
4	2	**15566151**	**connector N-female ,LCF12**	$30.00	$60.00
5	125	15220236	transmission line 1/2 inch foam RFS	$1.99	$249.00
6	3	921232-012	Ground kit 2 hole lug for 1/2"	$108.00	$324.00
7	1	58966	Antenna line suge arrestor	$75.00	$75.00
8	1	431926	Connector N-male 400 MNH-D	$15.00	$15.00
9	15	59520	Coaxial cable,	$1.49	$23.00
10	1	4200000	Connector N-male right angle 400MNH	$35.00	$35.00
11a	3	915659	Hangers, snap in	$31.00	$93.00
11b	3	390150	Round member adaptor	$63.00	$189.00
12	1	362558	Cushion waveguide for 1/2" cable runs	$8.00	$8.00
13a	1	T3000	MTR3000 base radio	$2,884.00	$2,884.00
13b	1	X330MT	VHF 100watts 136-174mhz	$2,650.00	$2,650.00
13c	1	X265VH	Preselector VHF	$231.00	$231.00
13d	1	X216AR	4 wire wireline	$312.00	$312.00
13e	1	X153BA	Rack mount hardware	$75.00	$75.00
13f	1	X371BA	Antenna relay	$199.00	$199.00
14	1	440-1	Antenna dipole 6db 150-162mhz	$693.00	$693.00
15	1	477944	Mount, side arm 24" tapered leg	$225.00	$225.00
16	2	15566151	connector N-female ,LCF12	$30.00	$60.00
17	125	15220236	transmission line 1/2 inch foam RFS	$1.99	$249.00
18	3	921232-012	Ground kit 2 hole lug for 1/2"	$108.00	$324.00
19	1	58966	Antenna line suge arrestor	$75.00	$75.00
20	1	431926	Connector N-male 400 MNH-D	$15.00	$15.00
21	15	59520	Coaxial cable,	$1.49	$23.00
22	1	4200000	Connector N-male right angle 400MNH	$35.00	$35.00
23a	3	915659	Hangers, snap in	$31.00	$93.00
				Sub-Total:	$16,483.00

Additional Information

FCC/LIC REQ.	
Deliver:	x
Ship:	x
Install:	x
Prog on File	x
SVC Visit Req	
CWO/COD	

Client Approval: X

Date:

e-mail: rheaton@wirelessnc.com

Consultant: Randy Heaton

Date:

Wireless Communications, In
4800 REAGAN DRIVE
CHARLOTTE, NC 28206

Quotation

Quote Number: 1
Consultant: Randy Heaton
Date of Quote: August 24, 2011

Customer:
Watauga County Sheriff's Dept.
184 Hodges Gap Road
Boone, North Carolina
Attn. Captain Jeff Virginia
ph
e-mail:

Tax Exempt Number:

TERMS: Net 30 days ARO
SHIP: best way
Page 2

Ship To:
Same
ph. 828-455-2904
e-mail rheaton@wirelessnc.com

Line	Qty.	Model number	Description	unit price	extended
23b	3	390150	Round member adaptor	$63.00	$189.00
24	1	362558	Cushion waveguide for 1/2" cable runs	$8.00	$8.00
25A	1	T3000	MTR3000 base radio	$2,884.00	$2,884.00
25b	1	X330MT	VHF 100watts 136-174mhz	$2,650.00	$2,650.00
25c	1	X265VH	Preselector VHF	$231.00	$231.00
25d	1	X216AR	4 wire wireline	$312.00	$312.00
25e	1	X182VM	Duplexer 144-160mhz	$1,078.00	$1,078.00
25f	1	THN6701	30 inch cabinet	$425.00	$425.00
26	1	440-1	Antenna dipole 6db 150-162mhz	$693.00	$693.00
27	2	**15566151**	**connector N-female, LCF12**	$30.00	$60.00
28	85	152202236	transmission line 1/2 inch foam RFS	$1.99	$170.00
29	1	58966	Antenna line surge arrestor	$75.00	$75.00
30	1	450942	Jumper LMR-400 N-male to N-male	$69.00	$69.00
31	1	921232-012	Ground kit 2 hole lug for 1/2"	$108.00	$108.00
32a	1	T3000	MTR3000 base radio	$2,884.00	$2,884.00
32b	1	X330MT	VHF 100watts 136-174mhz	$2,650.00	$2,650.00
32c	1	X265VH	Preselector VHF	$231.00	$231.00
32d	1	X216AR	4 wire wireline	$312.00	$312.00
32e	1	L1884	Battery revert charger 26V	$2,120.00	$2,120.00
32f	1	Z691	charger load cable MTR2000	$69.00	$69.00
32g	1	Z692	charger battery cable MTR2000	$99.00	$99.00
33a	1	T3000	MTR3000 base radio	$2,884.00	$2,884.00
33b	1	X330MT	VHF 100watts 136-174mhz	$2,650.00	$2,650.00
33c	1	X265VH	Preselector VHF	$231.00	$231.00
33d	1	X216AR	4 wire wireline	$312.00	$312.00
33e	1	X182VM	Duplexer 144-160mhz	$1,078.00	$1,078.00
34a	1	L1884	Battery revert charger 26V	$2,120.00	$2,120.00
34b	1	Z691	charger load cable MTR2000	$69.00	$69.00
34c	1	Z692	charger battery cable MTR2000	$99.00	$99.00
35a	1	416595	Outdoor cabinet 62" cabinet	$2,850.00	$2,850.00
35b	1	486477	Battery box kit for outdoor cabinet	$1,175.00	$1,175.00
35c	1	489667	Fan kit for outdoor cabinet	$195.00	$195.00
36	2	440-1	Antenna dipole 6db 150-162mhz	$693.00	$693.00
37	4	15566151	connector N-female, LCF12	$30.00	$120.00
38	100	15566151	transmission line 1/2 inch foam RFS	$1.99	$199.00
				Sub-Total:	$31,992.00

Additional Information

FCC/LIC REQ.	
Deliver:	x
Ship:	x
Install:	x
Prog on File	x
SVC Visit Req	
CWO/COD	

Client Approval: X

Date:

e-mail: rheaton@wirelessnc.com

Consultant: Randy Heaton

Date:

Wireless Communications, In
4800 REAGAN DRIVE
CHARLOTTE, NC 28206

Quotation

Quote Number: 1
Consultant: Randy Heaton
Date of Quote: August 24, 2011

Customer:
Watauga County Sheriff's Dept
184 Hodges Gap Road
Boone, North Carolina
Attn. Captain Jeff Virginia
ph
e-mail:

Tax Exempt Number:

TERMS: Net 30 days ARO
SHIP: best way
Page 3

Ship To:
Same
ph. 828-455-2904
e-mail rheaton@wirelessnc.com

Line	Qty.	Model number	Description	unit price	extended
39	2	58966	Antenna line surge arrestor	$75.00	$75.00
40	2	921232-012	Ground kit 2 hole lug for 1/2"	$108.00	$216.00
41	8	4311926	Connector N-male 400 MNH-D	$15.00	$120.00
42	20	59520	Coaxial cable	$1.49	$30.00
43	1	25387	Duplexer telwave	$1,855.00	$1,855.00
44	1	WCIEXTWARR	1st year field service	$3,300.00	$3,300.00
				Subtotal	$5,596.00
				total pages 1,2&3	$54,071.00
				installation	$13,527.00
				shipping	$1,140.00
				project management	$1,105.00
				Grand Total:	$69,843.00

Additional Information

FCC/LIC REQ.	
Deliver:	x
Ship:	x
Install:	x
Prog on File	x
SVC Visit Req	
CWO/COD	

Client Approval: X

Date:

e-mail: rheaton@wirelessnc.com

Consultant: Randy Heaton

Date:

AGENDA ITEM 5:

APPALACHIAN STATE UNIVERSITY (ASU) MATTERS

A. Request to Use the Old High School Softball Field

MANAGER'S COMMENTS:

Mr. John Welch with Appalachian State University Athletics will request permission from the Board to utilize the softball field at the old Watauga High School. Mr. Welch stated ASU would accept all expenditures and liabilities associated with their use of the field.

A draft release has been provided. Staff seeks direction from the Board.

Blank Page

Deron Geouque

From: welchje@appstate.edu
Sent: Wednesday, August 31, 2011 3:07 PM
To: Deron Geouque
Subject: Fwd: Softball Fall Sched
Attachments: Fall 2011.pdf

Deron,
Here is the calander of the requested days for the Old High School Softball Field. Coach Wesley scheduled practices so that we will not need lights. We will have an athletic trainer at every practice and we will provide a port-o-john. Also, we will take on all cost for field preparation/maintenance. Let me know if there is anything else you think we need to address before the meeting. Also, I can provide this information to be included in their packets. When is the deadline to have that to you to be included? Thanks!
John

----- Original Message -----
From: Shae Wesley
Date: Friday, August 26, 2011 4:51 pm
Subject: Softball Fall Sched
To: welchje@appstate.edu

> Hey there, here is our fall schedule in pdf form. Really you
> would just
> need Sept and October's schedule. Our fall season is limited to 45
> consecutive days of team practice. If we can have the field
> later until the
> weather changes we could also take our individual practices
> outside as well,
> but really my main focus would be the 45 days of team practice.
> Thank you
> so much for putting us on the schedule!!
>

> Shae Wesley
>
> Appalachian State University
>
> Head Softball Coach
>
> 425 Jack Branch Drive
>
> Boone, NC 28608
>
> Office: 828/262-7310
>
> Fax: 828/262-7716
>
> NOEQUAL-ASM (NOBACK(SOFT)) update
>

1

Deron Geouque

From: welchje@appstate.edu
Sent: Friday, August 26, 2011 11:34 AM
To: Deron Geouque
Cc: heustsswt@appstate.edu
Subject: Sept. 6 meeting

Deron,
Great talking to you earlier. We would like to be included on the Sept. 6 meeting agenda to address the ASU Softball team's use of the softball field at the old high school. Let us know what time we are scheduled for and I, Troy, or we will be there. Thanks again and have a great weekend.
John Welch
773-0936 Cell (if you have questions)

DRAFT

FACILITY USE AGREEMENT

Appalachian State University athletics department requests permission to utilize one softball field for our women's softball team for the fall and spring seasons as arranged by Appalachian's softball coach and the director of the Watauga County Parks and Recreation. Appalachian will transfer $5,000 annually to the Watauga County Parks and Recreation for the rights to use a facility.

Appalachian will provide supervision during times of use and will help keep the area clean and presentable at all times. Appalachian releases Watauga County and will indemnify you from and against any and all claims, actions, damages, liability, and expense in connection with loss of life, personal injury, and/or damage to property arising from activities while being utilized by Appalachian State University's softball team. In case Watauga County should, without fault on its part, be made a party to any litigation instituted against Appalachian State University by reason of Appalachian's use or occupancy of the field, then Appalachian shall protect and hold Watauga County Parks and Recreation harmless and shall pay all cost, expenses, and reasonable attorney's fees that may be incurred by Watauga County Parks and Recreation in such litigation. Appalachian requests a notice of six months if you wish for us to discontinue our use of your fields.

We appreciate your support in providing this opportunity for our women's softball program as we attempt to expand opportunities for female participation in sports.

Please sign below if you agree to this request:

_____ _____

Charlie Cobb, Athletics Director Date
Appalachian State University

_____ _____

Deron Geouque, County Manager Date
Watauga County

September 2011

Sun	Mon	Tue	Wed	Thu	Fri	Sat
				1 3-6pm—Practice 6:15pm—Weights	2 6:15am—Sprint Test 3-6pm—Practice	3 9am-1pm— Team Building Activity (meet 8:30am, TBA)
4 6:15pm—Weights	5 3-6pm—Practice 6:15pm—Weights	6 Day Off	7 3-6pm—Practice 6:15pm—Weights	8 3-6pm—Practice 6:15pm—Weights	9 3-6pm—Practice	10 Home FB Game (Recruits)
11 4-6pm—Scrimmage 6:15pm—Weights	12 3-6pm—Practice 6:15pm—Weights	13 Day Off	14 3-6pm—Practice 6:15pm—Weights	15 3-6pm—Practice 6:15pm—Weights	16 3-6pm—Practice	17 8-11am—Practice
18 4-6pm—Scrimmage 6:15pm—Weights	19 3-6pm—Practice 6:15pm—Weights	20 Day Off	21 3-6pm—Practice 6:15pm—Weights	22 3-6pm—Practice 6:15pm—Weights	23 3-6pm—Practice	24 Home FB Game
25 4-6pm—Scrimmage 6:15pm—Weights	26 3-6pm—Practice 6:15pm—Weights	27 Day Off	28 3-6pm—Practice 6:15pm—Weights	29 3-6pm—Practice 6:15pm—Weights	30 3-6pm—Practice	1 8-11am—Practice

October 2011

Sun	Mon	Tue	Wed	Thu	Fri	Sat
						1 **8-11am**—Practice
2 @Charlotte, NC 12:00 vs Wingate 2:00 vs UNC-C	3 **3-6pm**—Practice **6:15pm**—Weights	4 **Day Off**	5 **3-6pm**—Practice **6:15pm**—Weights	6 **3-6pm**—Practice **6:15pm**—Weights	7 **3-6pm**—Practice	8 **DH**—TBA
9 @Lenoir-Rhyne 12:00 TBA 2:00 TBA	10 **3-6pm**—Practice **6:15pm**—Weights	11 **Day Off**	12 **3-6pm**—Practice **6:15pm**—Weights	13 **Fall Break** **10am-1pm**—Practice **TBD**—Weights	14 **10am-1pm**—Practice	15 @Colunbia, SC Vs South Carolina Vs NC State
16 **6:15pm**—Weights	17 **6:15pm**—Weights	18 **Day Off**	19 **6:15pm**—Weights	20 **6:15pm**—Weights	21	22 Homecoming Alumni Functions
23 **6:15pm**—Weights	24 **TBA**—Individuals **6:15pm**—Weights	25 **Day Off**	26 **6:15am**—PW **TBA**—Individuals **6:15pm**—Weights	27 **TBA**—Individuals **6:15pm**—Weights	28 **6:15am**—PW **TBA**—Individuals	29 Mountaineer Village 11:30am-2:00pm FBall Game 1/2 Time
30 **6:15pm**—Weights	31 **TBA**—Individuals **6:15pm**—Weights					

November 2011

Sun	Mon	Tue	Wed	Thu	Fri	Sat
		1 **Day Off**	2 **6:15am**—*PW* **TBA**—*Individuals* **6:15pm**—*Weights*	3 **TBA**—*Individuals* **6:15pm**—*Weights*	4 **6:15am**—*PW* **TBA**—*Individuals*	5
6 **6:15pm**—*Weights*	7 **TBA**—*Individuals* **6:15pm**—*Weights*	8 **Day Off**	9 **6:15am**—*PW* **TBA**—*Individuals* **6:15pm**—*Weights*	10 **TBA**—*Individuals* **6:15pm**—*Weights*	11 **6:15am**—*PW* **TBA**—*Individuals*	12
13 **6:15pm**—*Weights*	14 **TBA**—*Individuals* **6:15pm**—*Weights*	15 **Day Off**	16 **6:15am**—*PW* **TBA**—*Individuals* **6:15pm**—*Weights*	17 **TBA**—*Individuals* **6:15pm**—*Weights*	18 **6:15am**—*PW* **TBA**—*Individuals*	19
20 **TBA**—*Team Thanks-giving Dinner* **6:15pm**—*Weights*	21 **6:15pm**—*Weights*	22 **Day Off**	23 **No Classes**	24 **Thanksgiving—State Holiday**	25	26 *Hitting Camp*
27 *Pitching Camp* **6:15pm**—*Weights*	28 **TBA**—*Individuals* **6:15pm**—*Weights*	29 **TBA**—*Individuals*	30 **TBA**—*Individuals* **6:15pm**—*Weights*	1	2	3

December 2011

Sun	Mon	Tue	Wed	Thu	Fri	Sat
				1 *6:15pm—Weights*	2	3
4 *6:15pm—Weights*	5 *6:15pm—Weights*	6	7 *6:15pm—Weights*	8 *6:15pm—Weights*	9 *TBA—Team Winter Party*	10 ***Reading Day***
11	12	13	14	15	16	17 *Pitching Camp*
18 *Hitting Camp*	19	20	21	22	23	24
25	26	27	28	29	30	31

Finals—Fall Semester

AGENDA ITEM 5:

APPALACHIAN STATE UNIVERSITY (ASU) MATTERS

B. Request to Use the Old High School Parking Lot

MANAGER'S COMMENTS:

Mr. Justice, Director of Game Operations with ASU, will request the use of the old Watauga High School parking lot on September 17th, 2011, for the university's open house and home football game. ASU will charge $5 for those parking at the lot and riding the shuttle to the university. The lot would be open at 2:00 PM with the shuttle service starting at 2:30 PM and ending at 11:00 PM.

Board direction is requested.

Blank Page

Deron Geouque

From: Douglas Justice [justicedj@appstate.edu]
Sent: Thursday, September 01, 2011 9:48 AM
To: Deron Geouque
Subject: RE: Sept. 17th Shuttle

Deron,
Thanks for the email. Please let me know if the information below will not suffice to get on the agenda:

Appalachian Athletics is requesting the use of the Old Watauga High School parking lot on Saturday the 17th of September. Appalachian State is having Open House on the morning of the 17th and many individuals will be coming to campus to learn about Appalachian and enjoying the shops, restaurants and entertainment in Watauga County. Along with Open House on the 17th, there is a home football game at 6:00pm. Athletics is requesting access to the old high school's parking lot to park individuals who will be attending both Open House and the football game and opportunity to park at the old high school and catch a ride on the shuttle to the game. Many of these individuals coming to open house will not have access to parking on campus and we would like to provide a park and ride service for these individuals.
We would open the lot at 2:00pm for parking and begin the shuttling at 2:30pm. Shuttling of individuals to the stadium and back to the parking lot would be every 30 minutes until 11:00pm. Our reasoning for wanting to use the old high school parking lot instead of the new high school's lot is because of the old high school's proximity to campus and the fact that the shuttle could get back and forth from the stadium to the lot in a shorter time than going to the new high school. We are planning on charging $5.00 per car to park in the lot and this will go to pay for the buses and drivers. Again, it is a service that we want to provide for individuals visiting campus that will hopefully make their experience better while visiting campus and the county.

If you have any questions, please do not hesitate to contact me at justicedj@appstate.edu or at 828-262-8447

Regards,
Doug Justice

Douglas Justice
Director of Game Operations
Appalachian State Athletics
Office: 828-262-8447
Cell: 828-406-2418
Fax: 828-262-2556

Blank Page

AGENDA ITEM 6:

SMART START ADMIN FUNDING REQUEST

MANAGER'S COMMENTS:

Smart Start and state childcare subsidies were recently cut and County funding was reduced by $42,300. This is due in part to the Children's Council can no longer utilize Smart Start subsidy toward administration of the program. The Children's Council was able to reduce their own programs and staffing to provide $21,150 or half of the $42,300 that was cut to the Social Services Department. Ms. Freda Smith, Treasurer for Children's Council, will provide a request for the County to accept the $21,150. Should the proposal be accepted, the County would be required to fund an additional $21,150 to the Social Services Department budget. The County could request the Children's Council to provide the full $42,300. This, however, would adversely affect the Children's Council by requiring them to make additional cuts in programming and staff. The Board would need to determine whether the best use of the $42,300 is in services provided by Social Services or the Children's Council.

Staff seeks direction from the Board.

Blank Page

Watauga County
Department of Social Services

SOCIAL SERVICES BOARD
David Turlington, Chair
Mary Moretz , Vice Chair
Nathan Miller
Tom Trexler
Audrey Tate

132 POPLAR GROVE CONNECTOR – SUITE C
BOONE, NORTH CAROLINA 28607
Telephone 828-265-8100
TDD 1-800-735-2962
Voice 1-800-735-8262
Fax 828-265-7638

JIM ATKINSON, MSW
Director

Memo

Date: August 30, 2011

To: Deron Geouque
County Manager

From: Jim Atkinson
Director

About 12 years ago, the Watauga County Department of Social Services began receiving a child care subsidy allocation from the Watauga County Children's Council, an affiliate of the NC Partnership for Children. The funding was part of the Smart Start program, and included some additional revenues to help with the administration of the program. The Smart Start subsidy allocation was intended to purchase child day care services from local providers, and targeted some special populations not covered by our regular state subsidy allocation. In addition, the Smart Start subsidy was to address a long waiting list for day care services. The administrative portion was included to help to fund an additional staff position due to the increased caseload created from eliminating the waiting list.

Due to recent cuts in Smart Start funding and state child care subsidy funding, we are currently over budget in monthly spending of our allocations, so we have started a waiting list in order to control spending. The list has 74 children waiting as of the date of this writing.

I recently heard from Freda Smith, board member and treasurer of the Children's Council. She contacted me regarding the issue of the funding ($42,300) that we receive as revenue from them for administrative costs for the Smart Start child care subsidy allocation. As we have discussed before, the funding plan has changed for them in that they cannot use any of their SS subsidy allocation toward administration of the program. Freda said that the Children's Council had been able to budget for half of the amount ($21,150) by reducing their own programs and staff time, and they are requesting that the county accept that as the admin revenue for the current fiscal year. By providing the entire amount, the Children's Council will have to cut further staff and eliminate some programs beneficial to the county.

I invited her to present the proposal at our DSS Board meeting on August 24, 2011, as a first step. The board recommended bringing the issue to the BOCC as soon as possible. Ms. Smith said that she can be there to represent the Children's Council.

This is a critical issue for the working parents of Watauga County.

Can we get this on the agenda for Sept. 6? Let me know if you have questions.

AGENDA ITEM 7:

TOURISM DEVELOPMENT AUTHORITY (TDA) MATTERS

A. Annual Report for Fiscal Year 2011

MANAGER'S COMMENTS:

Mr. Wright Tilley, Watauga County TDA, will provide the end of the year report for Fiscal Year 2010-11. In addition, he will provide highlights of tourism activities in the County and the State.

The report is for information only; therefore, no action is required.

Blank Page

ExploreBooneArea.com
STAY.PLAY.EAT.SHOP

Memorandum

TO:	Deron Geouque, Watauga County Manager Watauga County Board of Commissioners
FROM:	Wright Tilley, Executive Director
RE:	Fiscal Year 10/11 Report
DATE:	8/29/11

The Watauga County Tourism Development Authority (TDA) would like to give a wrap up report on our fiscal year 2010/2011 at the September 6, 2011 Board of Commissioner meeting.

Attached to this memo is a copy of the year end occupancy tax collection chart, a copy of the recently released 2010 county-wide tourism statistics by the NC Commerce Department for Watauga County and a copy of our marketing spreadsheet that outlines marketing and advertising plans for the new year. Below are some bulleted highlights from FY 2010/2011.

FY 2010/11 Highlights:

- **Posted highest occupancy tax collection year since the TDAs inception in 2006**
- **FY 10/11 Occupancy Tax collection was up 13% over last year, a $92,350.48 increase**
- **Highest recorded monthly collections for July, Oct., Dec., Jan., and June**
- **Ranked 19th out of North Carolina's 100 counties in terms of travel impact**
- **Domestic tourism in Watauga County generated an economic impact of 189.77 million in 2010, a 5.86% increase from 2009.**
- **State and local tax revenues from travel to Watauga County amounted to $18.26 million. This represents a $355.77 tax savings to each county resident.**
- **TDA was awarded more than $ 600,000 in grants for tourism development projects.**
- **Began development of Rocky Knob Park, completed 3 miles of hiking & mountain biking trails, will complete 4.7 more miles of trail by next summer.**
- **Began development of Watauga Gorge Park & Paddle Access – grant funded**

Blowing Rock
Boone
Watauga County

*Jan 2004 went to 6%
**October 2009 went to 6%
***First collections in July 2006

year	Jul	Aug	Sep	Oct	Nov	Dec	Jan	Feb	Mar	Apr	May	Jun	Totals
1999	33,426.07	53,605.11	49,082.37	34,262.59	47,629.65	20,691.79	19,879.66	14,260.17	12,858.68	11,307.16	15,887.21	24,136.17	$ 337,026.63
	56,207.70	42,718.16	33,367.50	50,420.80	24,342.79	25,549.88	26,297.10	27,365.42	19,631.48	22,950.89	30,083.06	37,876.76	$ 396,811.54
2000	36,717.82	60,697.01	45,197.20	33,930.90	45,226.40	19,325.92	22,217.35	13,934.44	13,717.15	10,805.99	12,868.52	21,118.15	$ 335,756.85
	55,152.34	46,307.14	38,345.44	51,364.62	23,782.07	30,410.79	31,186.49	30,289.82	20,397.70	21,395.11	28,273.36	39,828.82	$ 416,733.70
2001	33,693.61	53,726.50	47,149.39	30,661.53	46,518.39	20,296.40	18,134.27	11,476.27	12,671.66	11,222.12	12,715.96	21,681.40	$ 319,947.50
	55,934.46	46,873.44	34,901.83	55,741.35	26,572.28	26,425.93	31,433.38	32,696.79	24,781.74	25,419.92	31,850.05	40,566.55	$ 433,197.72
2002	35,529.42	54,188.40	49,599.72	26,773.78	43,128.09	20,787.78	16,820.72	16,420.77	10,812.84	10,653.40	20,654.56	28,706.66	$ 334,076.14
	60,911.52	52,777.19	35,532.56	54,712.92	29,634.38	30,279.25	37,404.64	30,629.28	27,312.67	22,467.30	30,773.49	36,589.54	$ 449,024.74
2003	56,446.26	46,218.95	25,445.33	45,549.60	20,948.42	20,044.46	25,817.35	20,161.20	23,399.54	39,361.92	39,411.92	69,197.57	$ 432,002.52
	60,298.00	50,962.98	34,236.30	58,150.01	30,153.56	33,720.32	35,706.85	36,448.84	25,319.75	25,682.67	32,799.45	45,893.70	$ 469,372.43
2004	108,049.44	78,433.56	51,393.64	92,739.07	39,699.55	45,350.35	24,270.10	28,516.15	21,160.12	26,433.79	42,345.87	69,270.16	$ 627,661.80
	64,541.86	47,448.51	34,077.41	59,846.80	27,648.77	33,811.39	28,580.79	37,287.74	26,663.99	34,154.83	31,030.00	49,656.42	$ 474,748.51
2005	113,063.44	91,263.12	63,029.55	101,704.60	48,236.72	52,011.03	31,285.00	36,908.06	29,911.54	35,645.29	51,122.12	82,149.17	$ 736,329.64
	58,697.84	54,414.19	38,202.89	55,382.18	32,601.32	36,404.12	33,683.49	40,307.89	30,291.46	27,984.62	33,121.99	54,588.31	$ 495,680.30
2006	120,889.02	99,291.93	79,181.30	107,943.97	50,879.85	55,420.32	31,335.11	37,531.32	29,435.55	37,166.79	56,637.83	90,201.81	$ 795,914.80
	61,771.86	55,782.28	47,694.90	60,693.75	34,397.34	38,915.72	32,370.51	39,309.54	32,360.25	31,836.21	40,015.44	58,186.19	$ 533,333.99
	98,722.04	75,180.98	58,824.05	92,706.53	52,673.99	80,063.48	49,632.33	48,692.79	24,933.99	31,383.76	43,056.80	72,422.32	$ 728,293.06
2007	114,224.85	110,457.88	80,870.39	109,896.31	59,030.00	48,586.27	38,506.48	36,295.22	29,336.94	31,027.15	52,229.41	70,080.86	$ 780,541.76
	60,648.36	64,133.62	48,287.67	65,322.55	40,487.67	38,718.11	39,281.79	43,701.25	31,274.93	30,639.22	38,566.26	53,110.74	$ 554,172.17
	110,838.40	99,859.19	59,507.63	97,802.70	69,670.45	83,090.14	55,520.98	59,116.81	32,934.23	27,323.63	50,465.39	70,074.86	$ 816,204.41
2008	111,461.45	104,287.66	56,990.66	102,356.95	47,704.66	40,350.89	37,999.48	27,945.33	17,050.58	27,595.26	42,923.70	63,017.66	$ 679,684.28
	61,317.05	63,953.04	41,615.00	68,196.86	34,510.11	36,713.60	39,892.00	37,147.00	26,212.62	29,896.70	35,085.79	51,316.00	$ 525,855.77
	121,620.82	103,051.49	52,092.94	98,971.94	68,375.52	81,345.85	54,845.36	49,735.68	16,665.87	26,951.94	41,815.06	62,837.02	$ 778,309.49
2009	99,353.76	78,133.43	52,907.25	92,038.43	41,149.73	44,052.46	31,229.92	24,841.76	16,719.75	30,389.13	40,948.56	74,004.48	$ 625,768.66
	59,722.46	54,259.28	42,339.19	132,508.11	66,927.72	83,276.00	73,736.54	73,015.95	64,623.26	63,695.25	76,073.53	105,259.98	$ 895,437.27
	108,977.15	84,495.10	51,097.22	92,273.50	58,827.09	73,783.88	60,170.04	46,869.99	27,193.49	30,013.12	38,878.69	56,144.88	$ 728,724.15
2010	115,976.02	90,968.67	62,746.64	110,462.60	46,076.08	48,646.35	32,574.26	27,536.06	21,737.93	30,279.41	45,012.96	68,215.21	$ 700,232.19
	125,492.50	105,980.34	81,385.95	140,980.21	59,358.13	79,508.35	66,435.77	62,098.35	57,960.12	57,524.10	66,449.14	95,652.67	$ 998,825.63
	133,639.59	93,076.01	53,858.36	110,589.58	59,540.12	87,183.21	61,415.73	48,165.16	26,222.43	29,038.46	41,072.86	77,273.12	$ 821,074.63

FY 2011 / 2012 Advertising Plan

Radio	July	Aug	Sept	Oct	Nov	Dec	Jan	Feb	Mar	Apr	May	June
Raleigh												
WDCG - G 105	x	x					x	x				x
TTN - Triangle Traffic Network	x	x					x	x				x
WRAL 101.5 - Winter Ski Ads							x	x				
Charlotte												
WNKS 95.1		x										x
WKKT 96.9 - Tweetsie Railroad Tags	x			x								x
WLNK 107.9 - Tweetsie Railroad Tags	x			x								x
Greensboro / High Point / Winston												
WKZL 107.5		x										
WKZL 107.5 Tweetsie Railroad Tags	x			x								x
WPAW 93.1 Tweetsie Tags	x			x								x
Other Markets												
WZLA - FM Abbeville,SC	x	x	x							.15 sec weather sponsorship - 3/hr 6am-6pm		
WLBD - AM Laurens, SC	x	x										
ISP - Appalachian Football Broadcasts			x	x	x	x						ASU football broadcasts - 16 stations
ISP - Appalachian Baseball Broadcasts										x	x	

Television	July	Aug	Sept	Oct	Nov	Dec	Jan	Feb	Mar	Apr	May	June
Visitor's Channel - Boone (free)												
Winter Ski Campaign (Raleigh Market)							x	x				

Print	July	Aug	Sept	Oct	Nov	Dec	Jan	Feb	Mar	Apr	May	June
Our State	x	x	x		x		x	x		x	x	x
AAA -GO Magazine	x	x	x	x	x	x	x	x			x	x
Carolina Parent	x					x	x	x			x	x
Charlotte Parent	x					x	x	x			x	x
Piedmont Parent	x										x	x
Blue Ridge Country	x	x	x	x	x	x	x	x	x	x	x	x

	July	Aug	Sept	Oct	Nov	Dec	Jan	Feb	Mar	Apr	May	June
Atlanta Magazine	x					x	x	x			x	
Southern Living	x					x						x
Lake Norman Currents	x	x					x	x				
Little Ones Magazine		x			x			x			x	
Florida Motorcoach Magazine	Fall & winter								Spring			
The Griffon - Military Magazine			x			x						x
WNC Magazine	x						x	x				x
S.E. Group Tour Magazine	x	x				x	x	x				
Charleston Magazine			x	x			x	x				
Blue Ridge Outdoors	TBD											
Sports Destination Management	x	x							x	x		
NC State Travel Guide	Annual - 1/2 page co-op with High Country Host											
Watauga Choose & Cut Guide												
High Country Press Visitor's Guide	seasonal - summer / winter / spring											
High Country Host Visitor's Guide												
Boone CVB Visitors Guide												
NC Spring/Summer Travel Guide												
French-Swiss Ski Group Guide	Back Cover - full page											
The Adventure Collective												
Trip Info Resource Guide												
Blue Ridge Parkway Guide & Blue Ridge Digest												
Charlotte Observer -Road Trips Travel Guide										x		
Charlotte Observer - Themed Travel Sections												
Raleigh News & Observer - Themed Travel Sections												
Bristol Motor Speedway Magazine												

On-Line

Ray's Weather	x	x	x	x	x	x	x	x	x	x	x	x
TripInfo.com	x	x	x	x	x	x	x	x	x	x	x	x
Go ASU.com			x	x	x	x						
VisitNC.com	x	x	x	x	x	x	x	x	x	x	x	x
CarolinaLiving.com	x	x	x	x	x	x	x	x	x	x	x	x
Blue Ridge Parkway.org	x	x	x	x	x	x	x	x	x	x	x	x
FamilyTravelFiles.com	x	x	x	x	x	x	x	x	x	x	x	x
Our State	x	x					x	x				

	July	Aug	Sept	Oct	Nov	Dec	Jan	Feb	Mar	Apr	May	June
WNKS - Charlotte		x										x
WDCG - Raleigh	x	x					x	x				x
Google Adwords - ExploreBooneArea.com	x	x	x	x	x	x	x	x	x	x	x	x
Facebook - ExploreBooneArea												
ASU Info.com 2011-2012	x	x	x	x	x	x	x	x	x	x	x	x
Group Tour Media.com	x	x				x	x	x				
Charlotte Parent online											x	x
Bristol MotorSpeedway online												

High Country Co-Op

	July	Aug	Sept	Oct	Nov	Dec	Jan	Feb	Mar	Apr	May	June
Print												
Radio & Television												
Internet - VisitNC.com	x	x	x	x	x	x	x	x	x	x	x	x
Billboards / Web videos / etc.												

Consumer Shows

	July	Aug	Sept	Oct	Nov	Dec	Jan	Feb	Mar	Apr	May	June
AARP - via BRPA				x								
Blue Ridge Digest Promotions												
Upstate Women's Show - Greenville, SC		x										
Southern Womens Show - Charlotte			x									
Orlando Home Show - Orlando				x								
Southern Womens Show - Jax				x								
Florida RV Supershow - Tampa							x					
Women's Show - Columbia SC								x				
Charlotte Spring Show								x				
Atlanta Home & Garden Show									x			
Southern Ideal Home Show - Raleigh										x		
Southern Womens Show - Raleigh										x		
Concord Mills Travel & Tourism Expo		x										
Adventure & FaithTravel Expo - Atlanta, GA				x								
Adventure Travel Expo - Washington, DC									x			
Tourism Day - Raleigh											x	

	July	Aug	Sept	Oct	Nov	Dec	Jan	Feb	Mar	Apr	May	June
Fulfillment												
State Welcome Centers												
HC Host												
Visitors Centers - NC Cities												
Phone/Internet Inquiries												
Blue Ridge Parkway Association												
Media Missions / Fam Tours												
Fall travel Writers Fam												
Spring/Summer Travel Writers FAM												
Ski Writers Fam												
AAA Travel Counselors FAM												

north carolina
Department of Commerce

Go

TEIM

- NC Fast Facts

Economic Impact

- TGA
- TEIM

Visitation Research

- Lodging Reports
- International Research
- Tax Data
- Archives

Quick Links

Travel Economic Impact Model

These county-by-county travel economic impact statistics are prepared annually by the Research Department of the US Travel Association for the N.C. Department of Commerce's Division of Tourism, Film and Sports Development.

In addition to the direct visitor spending estimates for all 100 NC counties, county level employment, payroll and tax revenues as a result of direct visitor spending are included.

This research was gathered using the **Travel Economic Impact Model (TEIM)**.

To use this information in a press release or reference it in any way, the name of the study is "The Economic Impact Of Travel On North Carolina Counties." The credit line should read: "This study was prepared for the North Carolina Division of Tourism, Film and Sports Development by the US Travel Association."

Watauga County Statistics for year 2010

VisitNC.com
NCFilm.com
VisitNCWine.com
SportsNC.com
NC.gov
N.C. Parks
N.C. Zoological Park
N.C. Aquariums
N.C. Historic Sites
N.C. Arts Council

Year	Revenues $(millions)	Change from previous year
2010	$189.77	5.86 %
2009	$179.27	-5.53 %
2008	$189.76	-0.73 %
2007	$191.15	6.70 %
2006	$179.14	9.18 %
2005	$164.08	3.10 %
2004	$159.14	4.95 %
2003	$151.64	-2.78 %
2002	$155.98	6.17 %
2001	$146.92	-2.89 %
2000	$151.29	5.33 %
1999	$143.64	10.30 %
1998	$130.23	7.92 %
1997	$120.67	1.79 %
1996	$118.55	5.12 %
1995	$112.78	8.79 %
1994	$103.67	6.42 %
1993	$97.42	6.53 %
1992	$91.45	8.87 %
1991	$84.00	2.46 %

- Domestic tourism in Watauga County generated an economic impact of $189.77 million in 2010. This was a 5.86 % change from 2009.
- In 2010, Watauga County ranked 19 in travel impact among North Carolina's 100 Counties.
- More than 2,390 jobs in Watauga County were directly attributable to travel and tourism.
- Travel generated a $41.13 million payroll in 2010.
- State and local tax revenues from travel to Watauga County amounted to $18.26 million. This represents a $355.77 tax saving to each county resident.
- Area attractions include the Blue Ridge Parkway, "Horn in the West" outdoor drama, Hickory Ridge Homestead, Mast General Store,Beech Mountain Resort, Mystery Hill, museums devoted to Appalachain culture and heritage, Blowing Rock, Tweetsie Railroad and Appalachain Ski Mountain.

Back

Select another Year or County : -Select Year- -Select County-

Title
- TEIM Methodology
- 2010 County Level Visitor Expenditures
- 2010 County Level Visitor Expenditures by Total Expenditures
- 2010 County Level Visitor Expenditures by Percent Change from 2009
- 2010 Economic Development Region Visitor Expenditures
- 2009 County Level Visitor Expenditures
- 2009 Economic Development Region Visitor Expenditures
- 2009 Impact of Visitor Spending by Sector
- 2008 County Level Visitor Expenditures
- 2008 Economic Development Region Visitor Expenditures

AGENDA ITEM 7:

TOURISM DEVELOPMENT AUTHORITY (TDA) MATTERS

B. Rocky Knob Phase II Change Order Request

MANAGER'S COMMENTS:

Mr. Eric Woolridge, Watauga County TDA, will request the Board approve a change order for $10,000 to the existing trail contract with Benchmark Trails. The contract is part of Watauga County's obligation to meet the requirements of the $500,000 PARTF grant. The original contract for $65,000 required a minimum of four miles of trails be built. Due to the terrain, special features are necessary to traverse the rocky areas as illustrated by the attached photos. The change order will cover the cost to construct the special features. There would be no cost to the County as long as the TDA Board approves the required funds.

Staff recommends approving the change order as presented, contingent upon the TDA Board approving the $10,000 at their September 13, 2011, meeting. Board action is requested.

Blank Page

MEMO

To: Watauga County Board of Commissioners
Deron Geouque, County Manager

From: Eric Woolridge, Tourism Planner
Watauga County Tourism Development Authority

Date: August 29, 2011

Re: Rocky Knob Park Phase II Trail Contract: Change Order Request

---

Watauga County TDA staff requests that the Watauga County Board of Commissioners authorize a change order – for an additional $10,000 – to the existing trail contract with Benchmark Trails, provided the TDA board authorizes funds at their September 13, 2011 meeting.

To meet the obligations of the $500,000 Parks and Recreation Trust Fund (PARTF) grant, the Watauga County Tourism Development Authority (TDA) provided funds in spring 2011 to Watauga County to complete phase II trail construction. Accordingly, Watauga County, with the commitment of TDA funds, entered into a grant contract with Benchmark Trails to complete this work.

The original contract was for $65,000 and included design and construction for a minimum of four miles of trail. At this time 4.62 miles have been designed and constructed, completing an extensive loop that extends to the upper reaches of Rocky Knob. Boone Area Cyclists volunteers continue to finish sections of this trail each week, but there are certain sections, due to the rocky terrain, that require the construction of boardwalk specialty features. This change order will allow for the construction of these specialty features. The contract and change order must remain with Watauga County to ensure grant reimbursement from PARTF.

Attached are four items: 1) map of existing trail system, including the phase II trail system currently under construction, 2) pictures of typical rocky areas where specialty features need to be constructed, 3) pictures of phase II trail recently finished by volunteers, and 4) pictures of phase I trail currently opened (sample photos that will be used when the TDA begins to promote park).

Phase I Trail. Open.

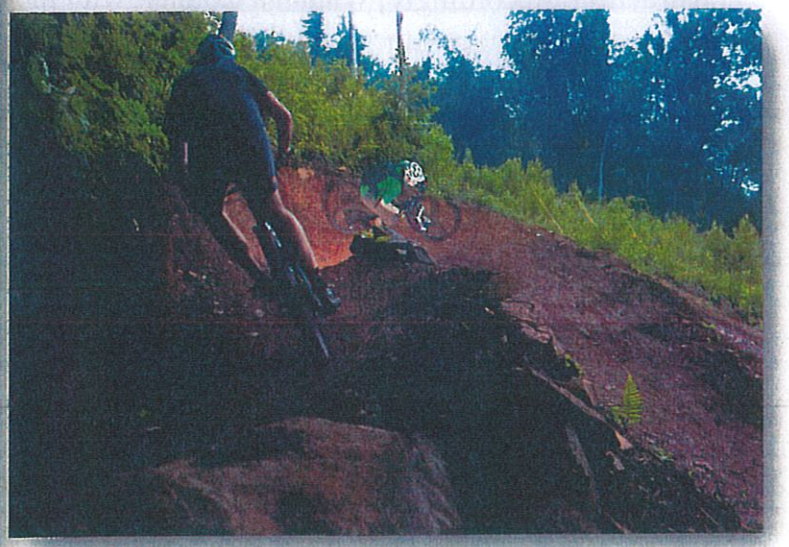

Phase II Trail Construction. Finished Sections.

Phase II Trail Construction. In need of specialty feature. Typical.

Rocky Knob Park Trail System

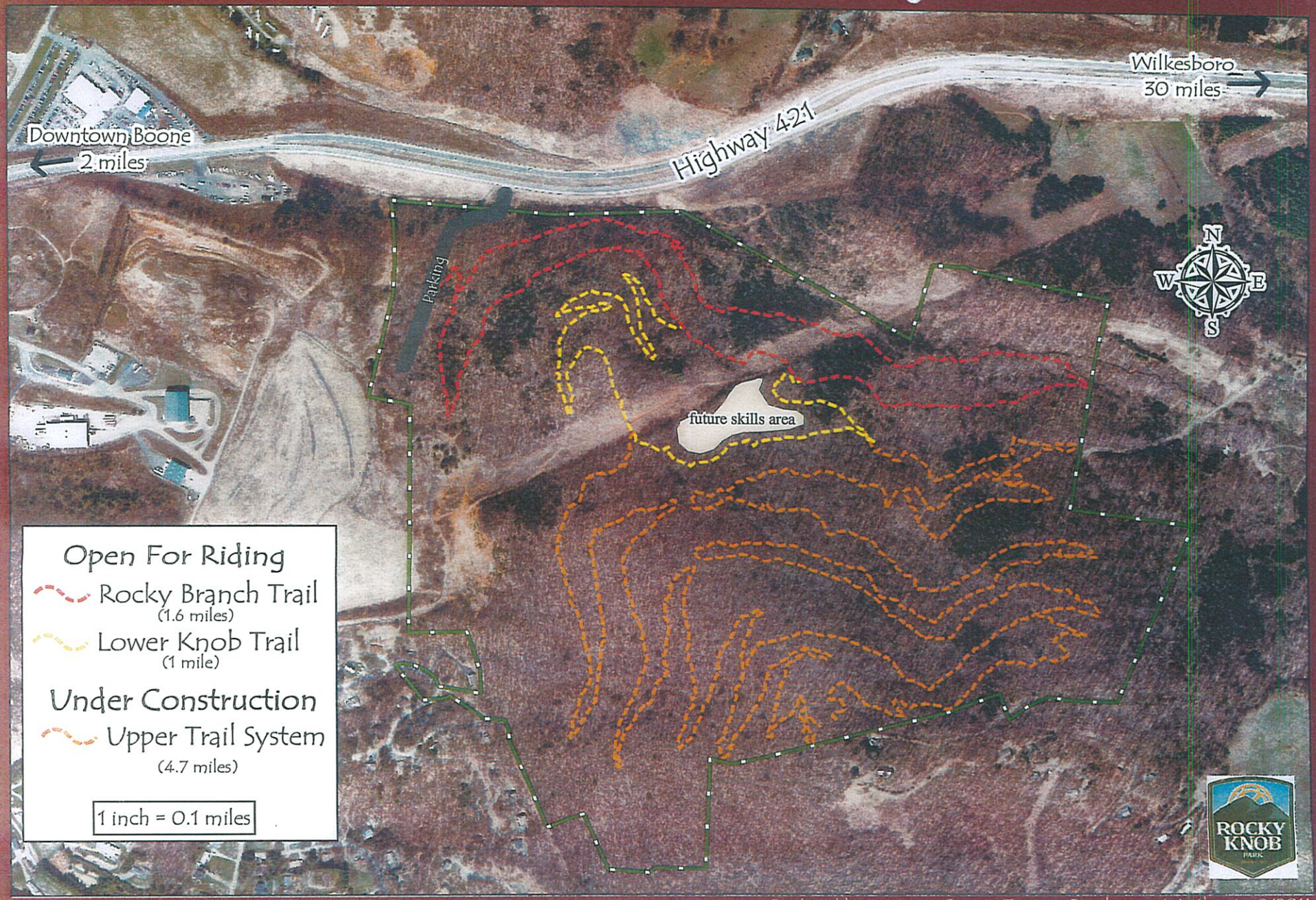

Produced by: Watauga County Tourism Development Authority, 8/2011

Blank Page

AGENDA ITEM 7:

TOURISM DEVELOPMENT AUTHORITY (TDA) MATTERS

C. Bid Award Request for Recreation Support Facilities

MANAGER'S COMMENTS:

Mr. Eric Woolridge will present bids for recreation facilities for the Rocky Knob and Watauga Gorge Parks. A total of seven (7) bids were received with Harmony Timberworks/Foscoe Construction submitting the lowest bid of $114,830.

Mr. Woolridge will request the Board award a contract to Harmony Timberworks and Foscoe Construction for the construction of a large picnic pavilion at the Rocky Knob Park. The construction of the pavilion will satisfy a portion of the County's obligation with regards to the $500,000 PARTF grant. Funds for the shelter will be provided by the TDA. The TDA will contract with Harmony Timberworks and Foscoe Construction for the remaining $76,570 to meet their other grant requirements.

Staff requests the Board approve a contract with Harmony Timberworks and Foscoe Construction in the amount of $38,260 for the construction of a large picnic pavilion at the Rocky Knob Park, contingent upon County Attorney review and funds being authorized by the Watauga County TDA at their September 13, 2011, meeting.

Board action is required.

Blank Page

Memo

To: Watauga County Board of Commissioners
Deron Geouque, County Manager

From: Eric Woolridge, Tourism Planner
Watauga County Tourism Development Authority

Date: August 29, 2011

Re: Award of Contract for PARTF Related Recreation Facilities

---

On July 17, 2011 the Watauga County TDA issued a public bid package/request for proposals for constructing the following facilities at Rocky Knob: small shelter, large shelter, large gateway, and trailhead gateway. For Watauga Gorge Park, were bid the following: small shelter, an entry sign, and a kiosk.

Bids were due on August 22, 2011. There were seven (7) proposals submitted with the following results:

1) Harmony Timberworks/ Foscoe Construction: $114,830
2) Hardin Creek: $129,361.60
3) Al Lewis/ Meridian: $140,678.71
4) Marlow: $192,760
5) 4 Forty Four/ Carolina Timberworks: $194,000
6) Headwaters: $216,856
7) Mike Smith: $225,922.75

Watauga County TDA staff recommends that Watauga County award Harmony Timberworks and Foscoe Construction a contract for the construction of the large picnic pavilion at Rocky Knob Park, subject to attorney approval.

The bid amount for this shelter is $38,260, an amount to be appropriated by the WCTDA at their September 13, 2011 board meeting; this contract does not require any funds from Watauga County.

With the construction of this shelter, the county will meet another obligation of the $500,000 Parks and Recreation Trust Fund (PARTF) grant. PARTF requires that the construction of all grant-related facilities be contracted directly with the county to maintain eligibility for reimbursement.

The WCTDA will contract directly with Harmony Timberworks and Foscoe Construction for all other facilities described in the bid package. With the construction of these additional facilities, the WCTDA will meet their obligations associated with two grants: Communities Putting Prevention to Work ($30,000) and Recreation Trails Program ($75,000).

Attachments: Recreation Facility Design Manual

Blank Page

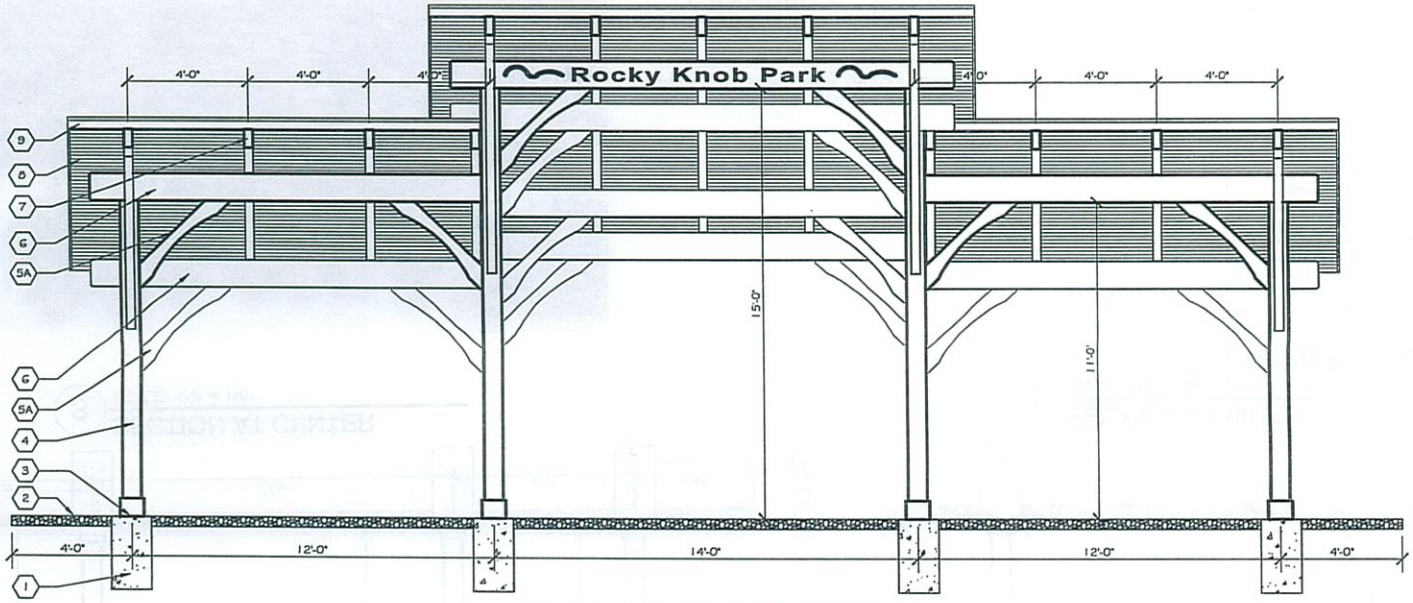

1 ELEVATION - LONG SIDE
SCALE: 1/4" = 1'-0"

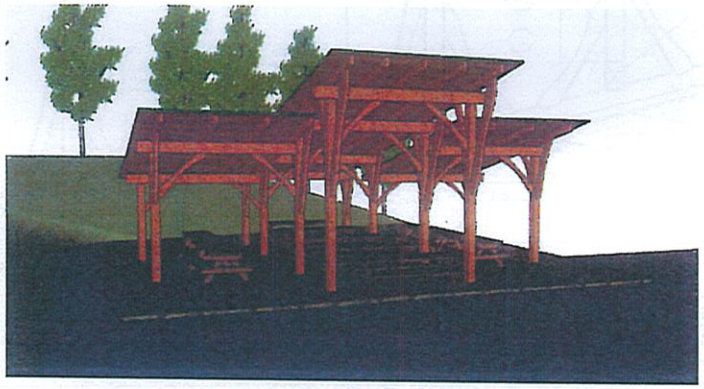

Note: Slab and tables not part of project. Some details not shown including timber chamfering, fascia, and gutter/downspout.

2 3D VIEW
SCALE: NONE

GENERAL NOTES:

1. Timber frame joinery detailing and engineering shall be provided by the timber frame craftsman, however, exposed fasteners will not be accepted. Timber frame supplier shall submit detailed shop drawings to the architect and Owner for approval prior to fabrication.
2. All Douglas Fir timber components shall be grade #1 & Better FOHC (Free-of-heart-center) and green/partially air dried.
3. Finish on post, beams, braces and roof deck/ceiling shall be two coats of Sikkens Cetol SRD or similar (please note in bid) applied per manufacturer's omstructions. Color shall be selected by the Owner.
4. Contractor may propose bid alternates for wood species other than those noted where there may be opportunity for use of local materials or cost savings for the Owner.

Date:
January 27, 2011
Revisions:

Watauga County Tourism Development Authority
Picnic Pavilion - Large
Watauga County, North Carolina

393 Glendale Dr
Boone, NC 28607
(828) 268-9946
mdandarchitecture@gmail.com
Marland Architecture

DRAWING
A1
ELEVATION & 3D VIEW

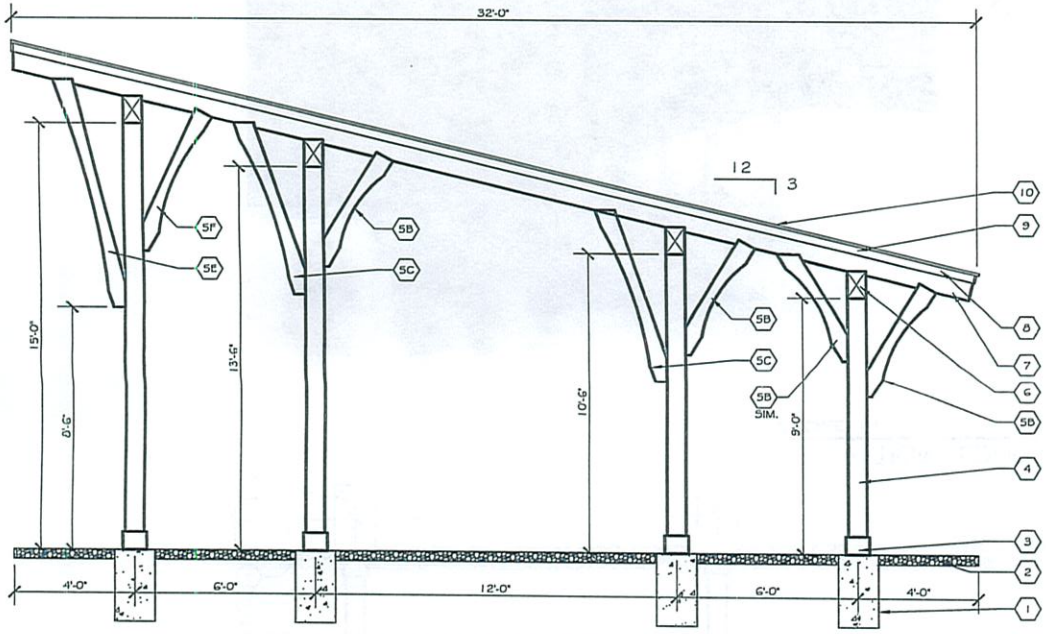

3 SECTION AT CENTER
SCALE: 1/4" = 1'-0"

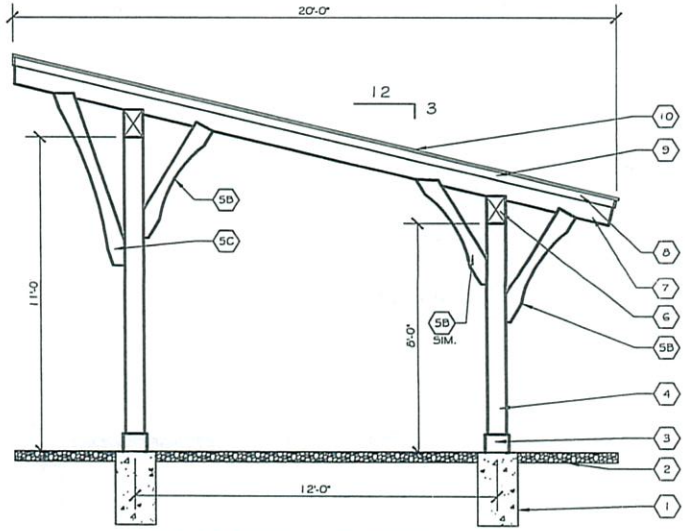

4 SECTION AT SIDES
SCALE: 1/4" = 1'-0"

Note: Slab and tables not part of project. Some details not shown including timber chamfering, fascia, and gutter/downspout.

5 3D VIEW
SCALE: NONE

GENERAL NOTES:

1. Timber frame joinery detailing and engineering shall be provided by the timber frame craftsman, however, exposed fasteners will not be accepted. Timber frame supplier shall submit detailed shop drawings to the architect and Owner for approval prior to fabrication.
2. All Douglas Fir timber components shall be grade #1 & Better FOHC (Free-of-heart-center) and green/partially air dried.
3. Finish on post, beams, braces and roof deck/ceiling shall be two coats of Sikkens Cetol SRD or similar (please note in bid) applied per manufacturer's omstructions. Color shall be selected by the Owner.
4. Contractor may propose bid alternates for wood species other than those noted where there may be opportunity for use of local materials or cost savings for the Owner.

Date:
January 27, 2011
Revisions:

Watauga County Tourism Development Authority
Picnic Pavilion – Large
Watauga County, North Carolina

393 Glendale Dr
Boone, NC 28607
(828) 268-9946
marlandarchitecture@gmail.com
Marland Architecture

DRAWING
A2
ELEVATION & 3D VIEW

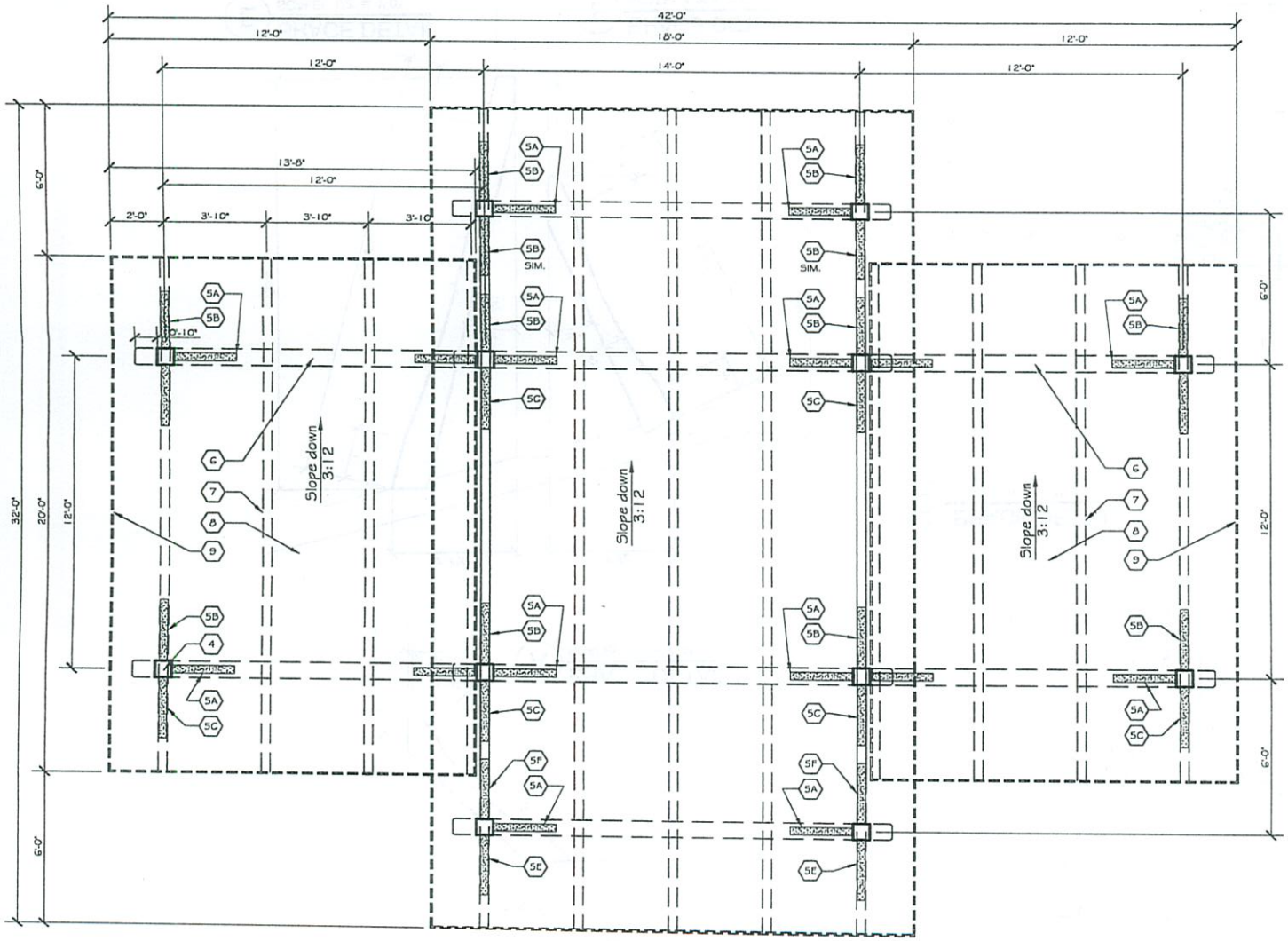

6 PLAN
SCALE: 1/4" = 1'-0"

GENERAL NOTES:

1. Timber frame joinery detailing and engineering shall be provided by the timber frame craftsman, however, exposed fasteners will not be accepted. Timber frame supplier shall submit detailed shop drawings to the architect and Owner for approval prior to fabrication.
2. All Douglas Fir timber components shall be grade #1 & Better FOHC (Free-of-heart-center) and green/partially air dried.
3. Finish on post, beams, braces and roof deck/ceiling shall be two coats of Sikkens Cetol SRD or similar (please note in bid) applied per manufacturer's omstructions. Color shall be selected by the Owner.
4. Contractor may propose bid alternates for wood species other than those noted where there may be opportunity for use of local materials or cost savings for the Owner.

KEYED NOTES:

1. Concrete footing 30" deep to flush with finish grade. Refer to Detail D/A2.
2. Pad for tables shall be 2" of pea gravel over 2" of small crusher run type gravel.
3. Post base to footing connection shall be Simpson Strong Tie ABU88 or approved equal installed per manufacturer's instructions. Wrap base with 1x8 cedar trim to hide connector.
4. 8x8 Doug Fir post - chamfer edges ½" typical to within 4" from grade and beams.
5. 4x8 bracing per details A, B, & C
6. 8x12 Doug Fir beam - chamfer edges and ends ½" typical
7. 4x8 Doug Fir rafters with birdsmouth cuts at beams and braces as shown.
8. 2x6 spruce T&G decking
9. 1x4 cedar fascia board
10. "Classic Rib" metal roofing, 29 gauge, 38" wide with 40 year min. color warranty and matching flashing and gutter/ downspout on lowest edge. Install metal roofing per manufacturer's instructions appropriate for local wind codes. Color shall be selected by Owner.

Date:
January 27, 2011
Revisions:

Watauga County Tourism Development Authority
Picnic Pavilion - Large
Watauga County, North Carolina

Marland Architecture
393 Glendale Dr
Boone, NC 28607
(828) 268-9946
marlandarchitecture@gmail.com

DRAWING
A3
PLAN

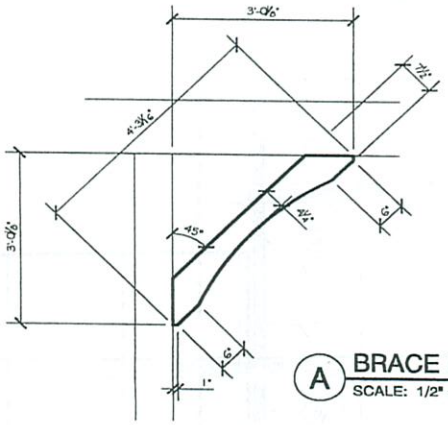

A BRACE DETAIL
SCALE: 1/2" = 1'-0"

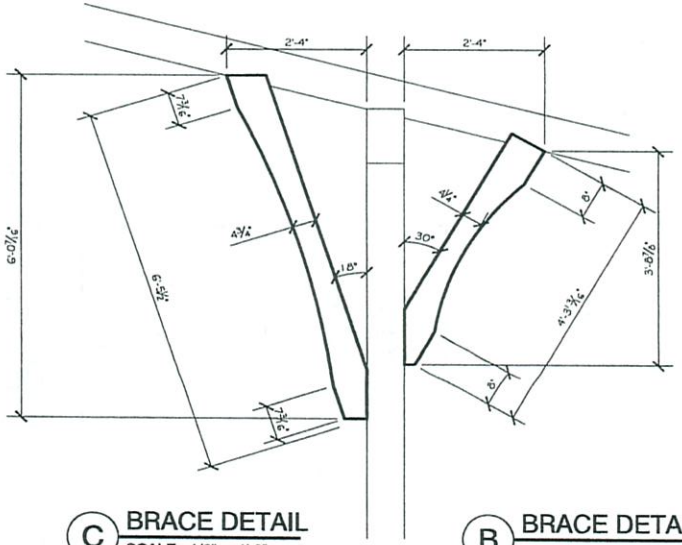

C BRACE DETAIL
SCALE: 1/2" = 1'-0"

B BRACE DETAIL
SCALE: 1/2" = 1'-0"

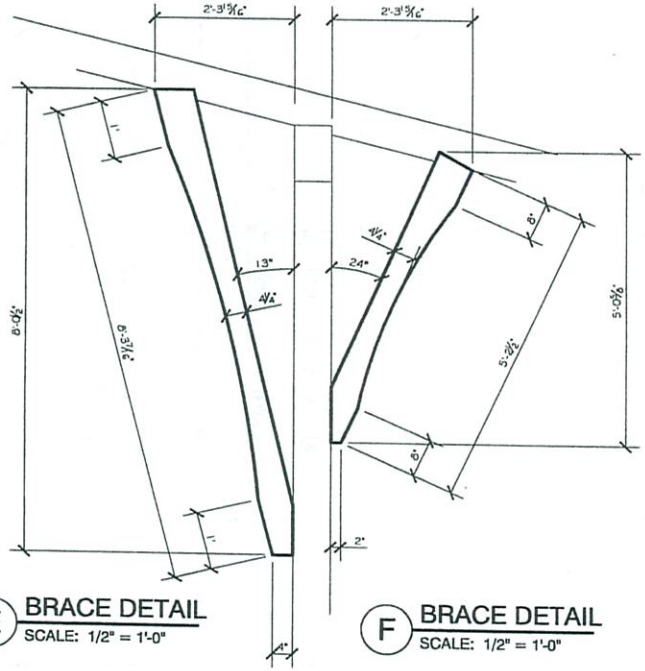

E BRACE DETAIL
SCALE: 1/2" = 1'-0"

F BRACE DETAIL
SCALE: 1/2" = 1'-0"

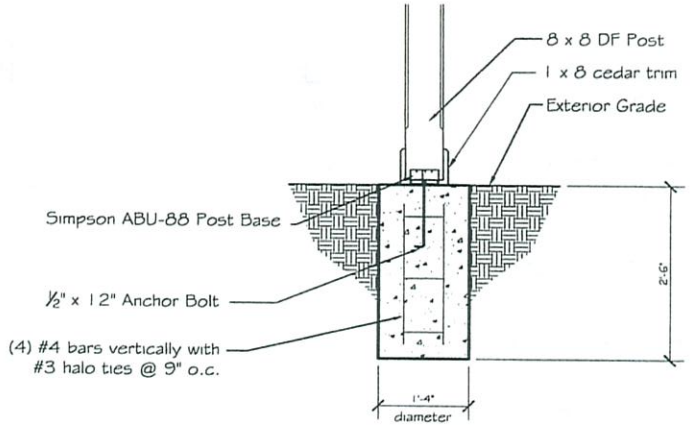

D FOOTING DETAIL
SCALE: NONE

Date:
January 27, 2011
Revisions:

Watauga County Tourism Development Authority
Picnic Pavilion - Large
Watauga County, North Carolina

393 Glendale Dr
Boone, NC 28607
(828) 268-9946
Marland Architecture

DRAWING
A4
DETAILS

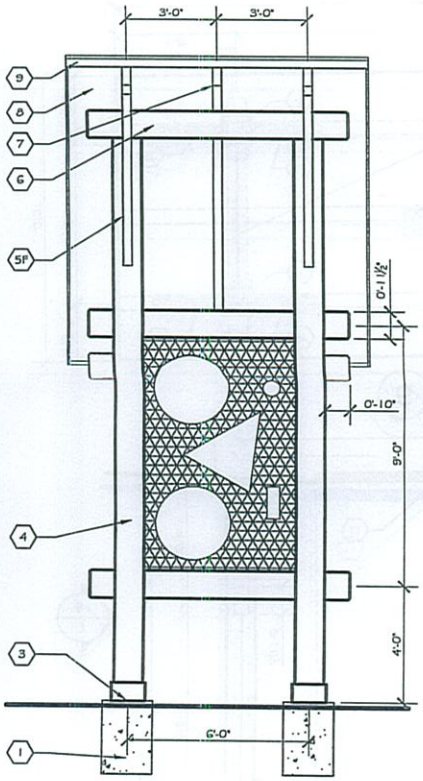

1 ELEVATION - TALL SIDE
SCALE: 1/4" = 1'-0"

"Bicycle" artwork shall be 1/2" thick aluminum with design cut by water jet. Aluminum shall then be powder coated in color as selected by the Owner. Design is representation only. Artwork shall be provided by graphic designer.

"Rocky Knob Park" sign shall be wood with raised letters/ logo. Logo is representation only. Artwork shall be provided by graphic designer. Graphics on reverse side TBD by Owner.

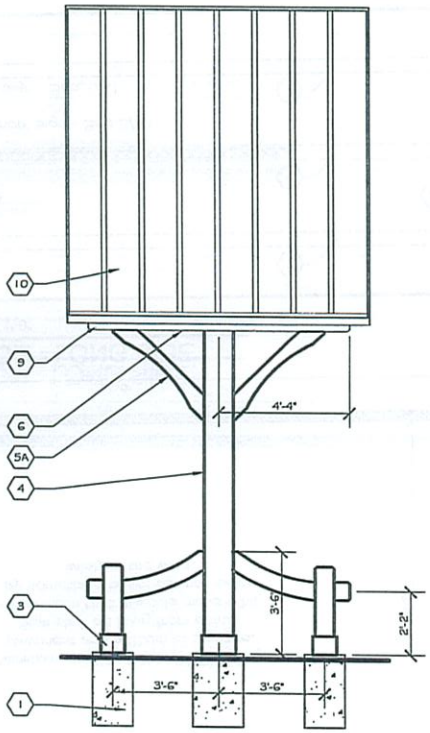

2 ELEVATION - LOW SIDE
SCALE: 1/4" = 1'-0"

3 SIGN AT GATEWAY
SCALE: 1/4" = 1'-0"

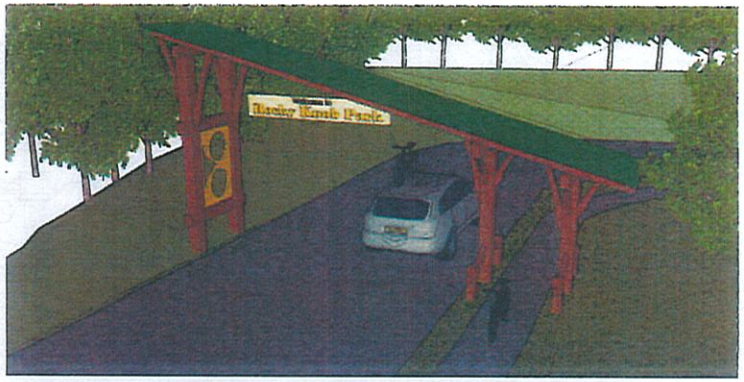

Note: Asphalt roadway is existing. Some details not shown including timber chamfering, fascia, and gutter/downspout.

4 3D VIEW - HWY 421 SIDE
SCALE: NONE

Note: Asphalt roadway is existing. Some details not shown including timber chamfering, fascia, and gutter/downspout.

5 3D VIEW - TALL SIDE
SCALE: NONE

Date:
January 25, 2011
Revisions:

Watauga County Tourism Development Authority
Rocky Knob Park Gateway
Watauga County, North Carolina

393 Glendale Dr
Boone, NC 28607
(828) 268-9946
Marland Architecture

DRAWING
A1
3D VIEWS & ELEVATIONS

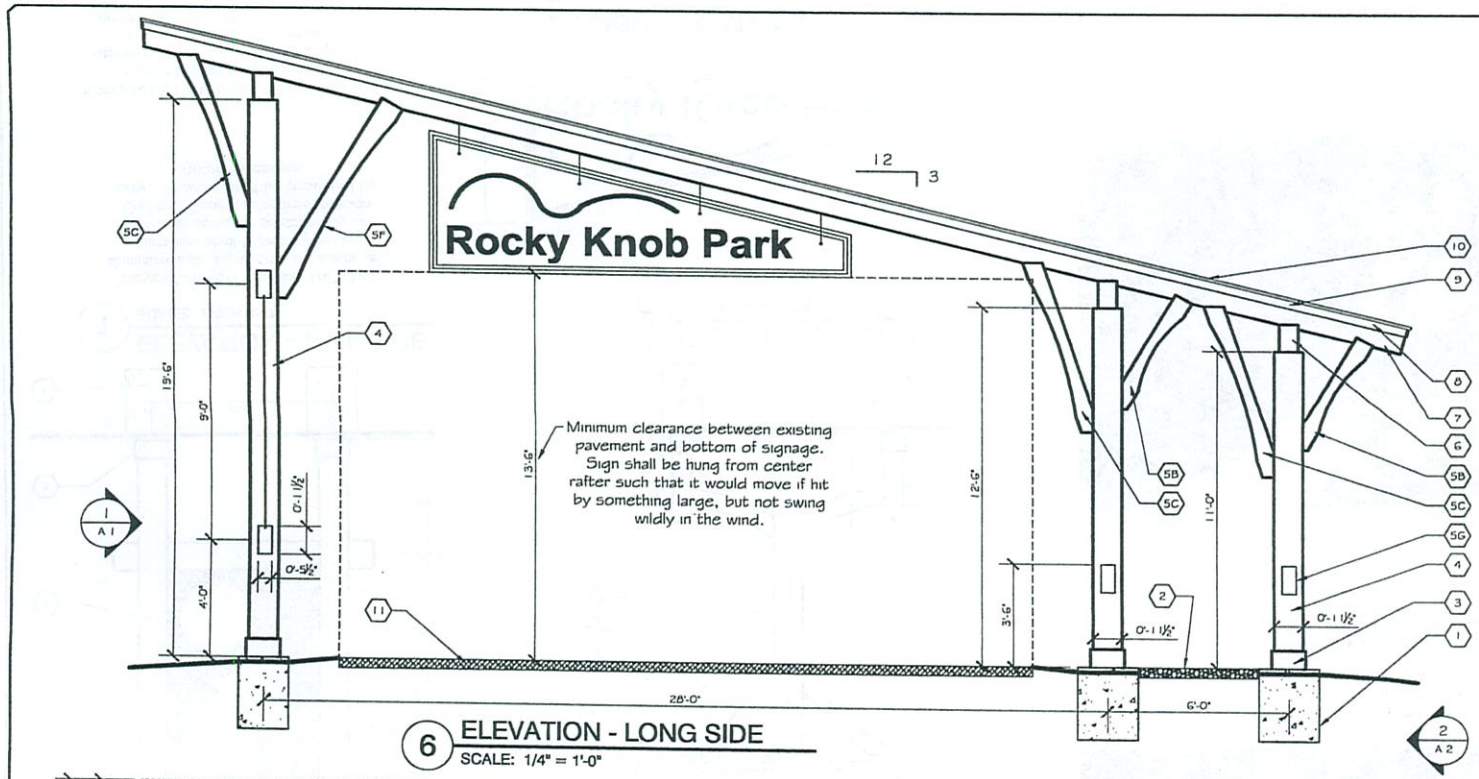

6 ELEVATION - LONG SIDE
SCALE: 1/4" = 1'-0"

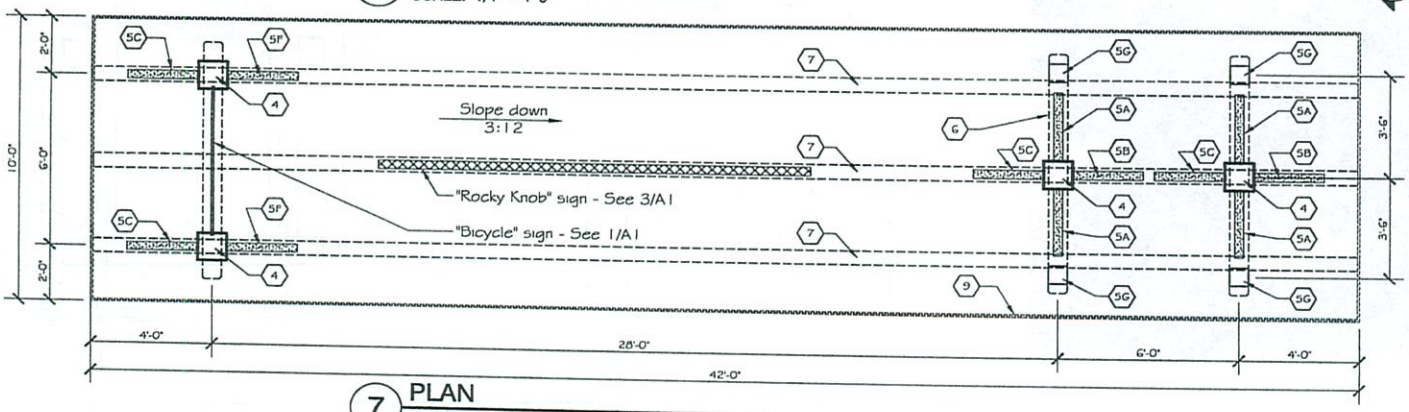

7 PLAN
SCALE: 1/4" = 1'-0"

GENERAL NOTES:

1. Timber frame joinery detailing and engineering shall be provided by the timber frame craftsman, however, exposed fasteners will not be accepted.
2. Finish on post, beams, braces and roof deck/ceiling shall be Sikkens Cetol SRD or similar (please note in bid) and color shall be selected by the Owner.
3. Contractor may propose bid alternates for wood species other than those noted where there may be opportunity for use of local materials or cost savings for the Owner.

KEYED NOTES:

1. Concrete footing 30" deep to 2" above finish grade. Refer to Details D/A2 and E/A2.
2. Pad for bike path shall be 4" of small crusher run type gravel.
3. Wrap base with 1x cedar trim to hide column base connector to concrete. Refer to footing details.
4. 12x12 Doug Fir post - chamfer edges ½" typical to within 4" from grade and beams.
5. 4x8 Doug Fir bracing per details A, B, C, F, & G.
6. 8x12 Doug Fir beam - chamfer edges and ends ½" typical
7. 6x12 Doug Fir rafters with birdsmouth cuts at beams and braces as shown.
8. 2x6 spruce T&G decking
9. 1x4 cedar fascia board
10. "Classic Rib" metal roofing, 29 gauge, 38" wide with 40 year min. color warranty and matching flashing and gutter/ downspout on lowest edge. Install metal roofing per manufacturer's instructions appropriate for local wind codes. Color shall be selected by Owner.
11. Existing asphalt roadway, approx 22' wide. Protect from damage during the work of this project.

Date:
January 25, 2011
Revisions:

Watauga County Tourism Development Authority
Rocky Knob Park Gateway
Watauga County, North Carolina

393 Glendale Dr
Boone, NC 28607
(828) 264-9946
mike@marlandarchitecture@gmail.com
Marland Architecture

DRAWING
A2
PLAN & ELEVATION

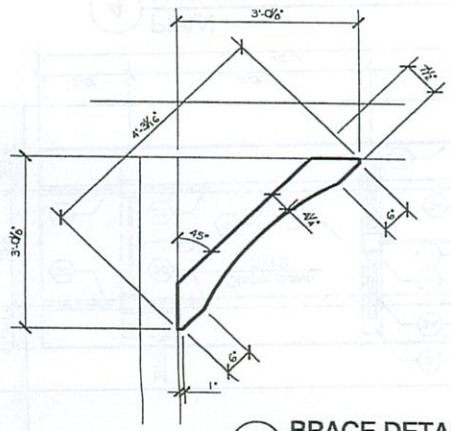

A BRACE DETAIL
SCALE: 1/2" = 1'-0"

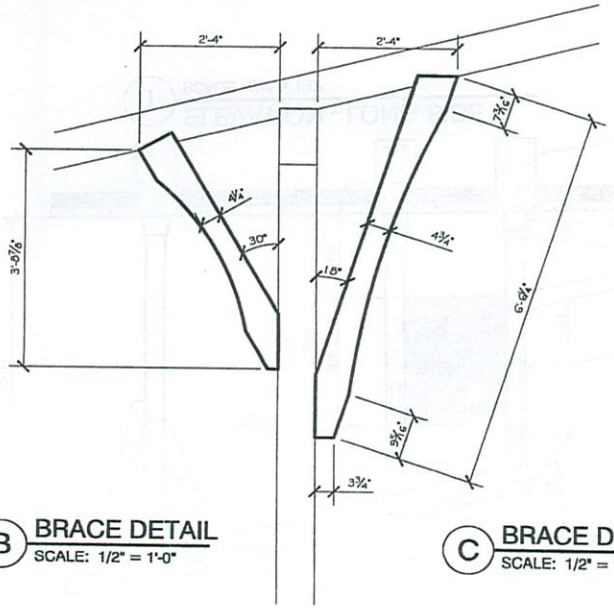

B BRACE DETAIL
SCALE: 1/2" = 1'-0"

C BRACE DETAIL
SCALE: 1/2" = 1'-0"

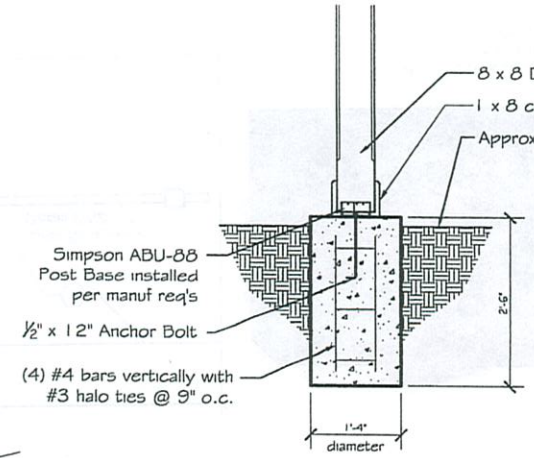

D FOOTING DETAIL
SCALE: NONE

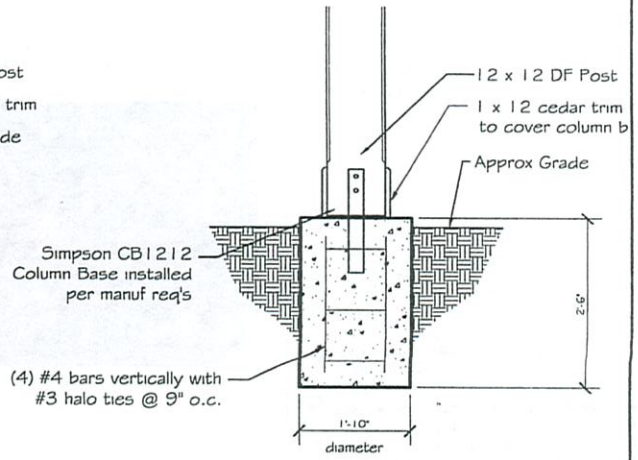

E FOOTING DETAIL
SCALE: NONE

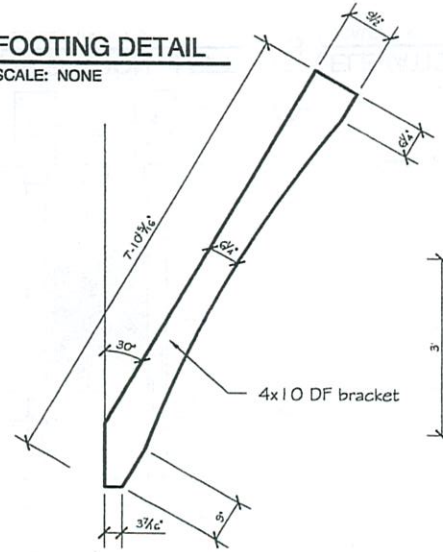

F BRACE DETAIL
SCALE: 1/2" = 1'-0"

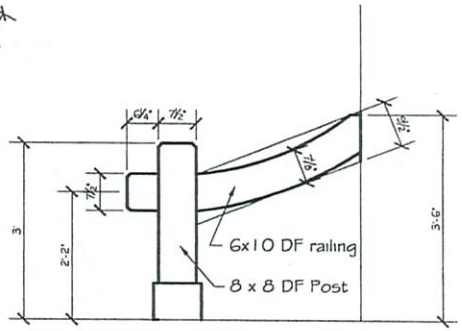

Footing Detail "D"

G RAILING DETAIL
SCALE: 1/2"=1'-0"

Date:
January 25, 2011
Revisions:

Watauga County Tourism Development Authority
Rocky Knob Park Gateway
Watauga County, North Carolina

593 Glendale Dr
Boone, NC 28607
(828) 268-9946
marlandarchitecture@gmail.com
Marland Architecture

DRAWING
A3
DETAILS

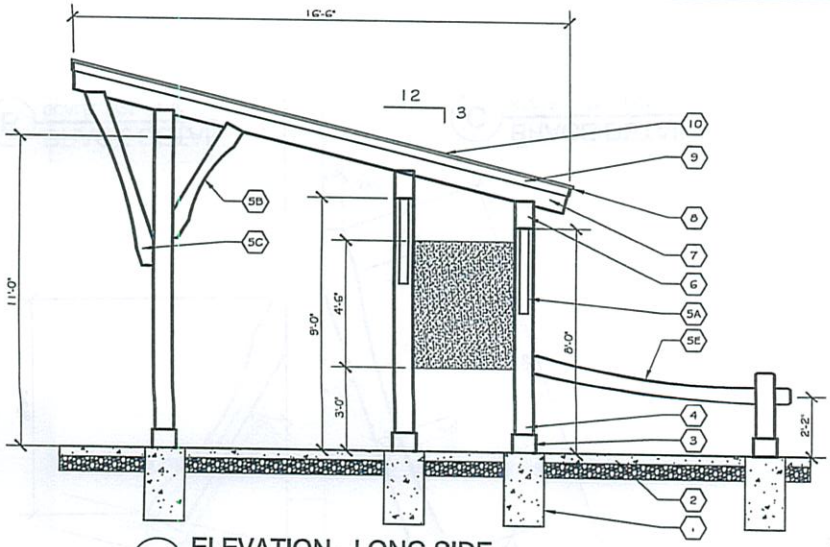

1 ELEVATION - LONG SIDE
SCALE: 1/4" = 1'-0"

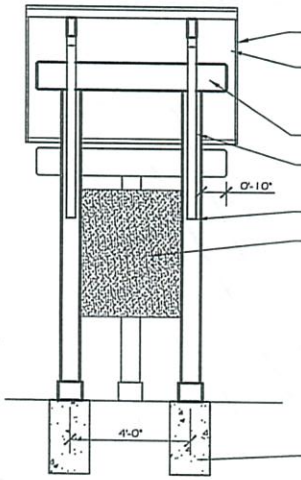

2 ELEVATION - LEFT
SCALE: 1/4" = 1'-0"

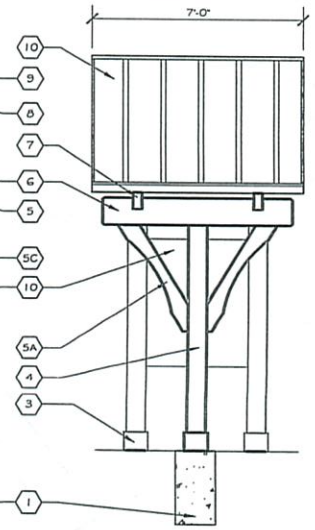

3 ELEVATION - RIGHT
SCALE: 1/4" = 1'-0"

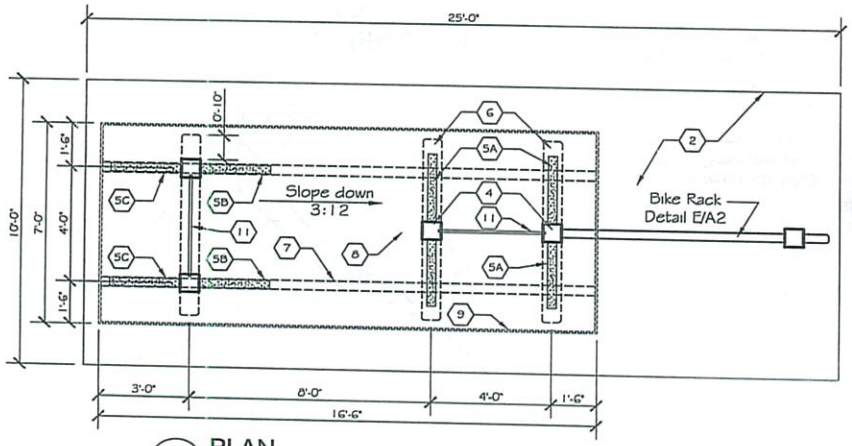

4 PLAN
SCALE: 1/4" = 1'-0"

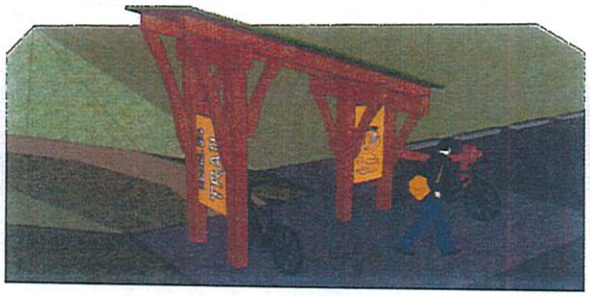

Note: Some details not shown including timber chamfering, fascia, and gutter/downspout.

5 3D VIEW
SCALE: NONE

GENERAL NOTES:

1. Timber frame joinery detailing and engineering shall be provided by the timber frame craftsman, however, exposed fasteners will not be accepted.
2. Finish on post, beams, braces and roof deck/ceiling shall be Sikkens Cetol SRD or similar (please note in bid) and color shall be selected by the Owner.
3. Contractor may propose bid alternates for wood species other than those noted where there may be opportunity for use of local materials or cost savings for the Owner.

KEYED NOTES:

1. Concrete footing 30" deep to flush with finish grade. Refer to Detail D/A2.
2. 4" concrete slab over 6" gravel, sloped to drain, with broom finish and control joints @ 5' o.c. max.
3. Post base to footing connection shall be Simpson Strong Tie ABU88 or approved equal installed per manufacturer's instructions. Wrap base with 1x8 cedar trim to hide connector.
4. 8x8 Doug Fir post - chamfer edges ½" typical to within 4" from grade and beams.
5. 4x8 bracing per details A, B, & C and bike rack per detail E.
6. 8x12 Doug Fir beam - chamfer edges and ends ½" typical
7. 4x8 Doug Fir rafters with birdsmouth cuts at beams and braces as shown.
8. 2x6 spruce T&G decking
9. 1x4 cedar fascia board
10. "Classic Rib" metal roofing, 29 gauge, 38" wide with 40 year min. color warranty and matching flashing and gutter/ downspout on lowest edge. Install metal roofing per manufacturer's instructions appropriate for local wind codes. Color shall be selected by Owner.
11. 1/2" thick aluminum panel with powder coat finish in color selected by the Owner. Trail map and other signage (by Owner) shall be attached to the aluminum panel.

Date:
January 25, 2011
Revisions:

Watauga County Tourism Development Authority
Trail Head Gateway
Watauga County, North Carolina

393 Glendale Dr
Boone, NC 28607
(828) 268-9946
marlandarchitecture@gmail.com
Marland Architecture

DRAWING
A1
3D VIEWS & ELEVATIONS

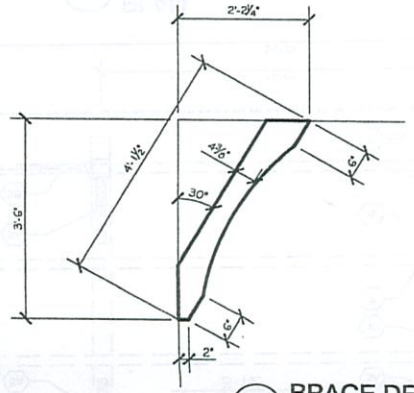

A BRACE DETAIL
SCALE: 1/2" = 1'-0"

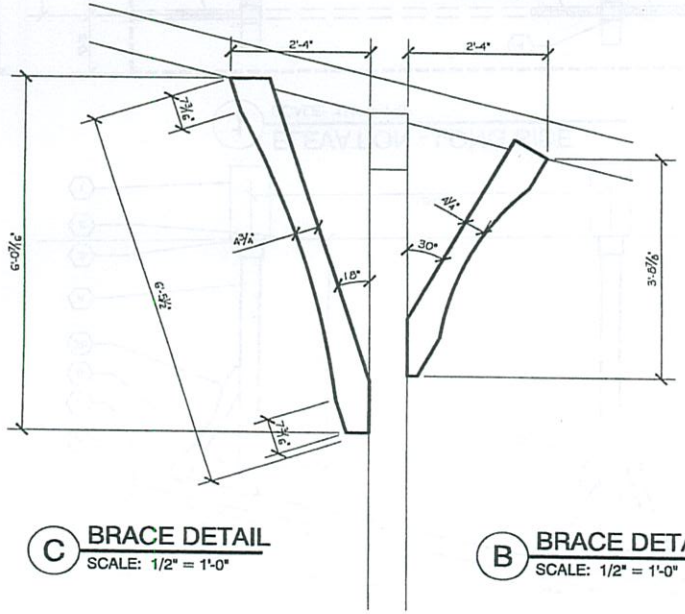

C BRACE DETAIL
SCALE: 1/2" = 1'-0"

B BRACE DETAIL
SCALE: 1/2" = 1'-0"

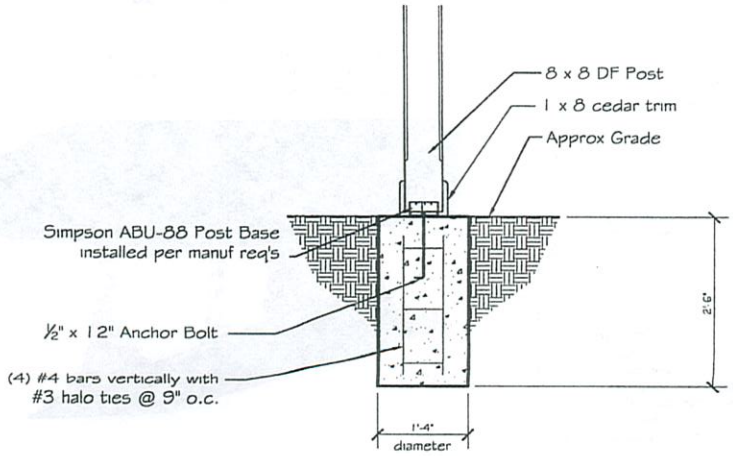

D FOOTING DETAIL
SCALE: NONE

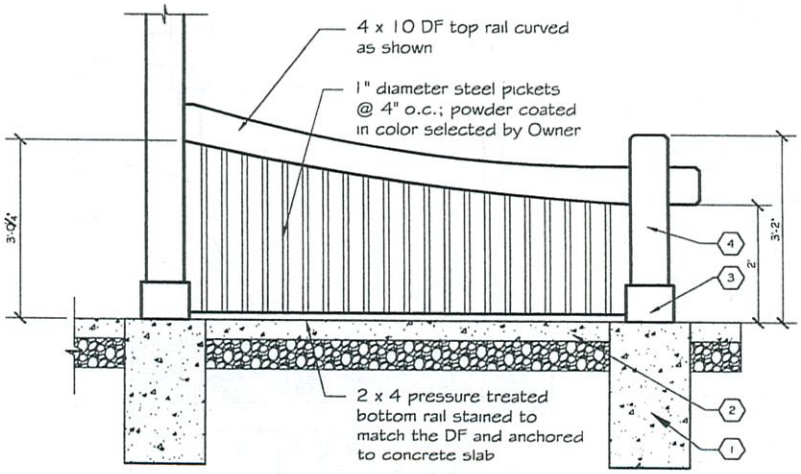

E BIKE RACK DETAIL
SCALE: 1/2" = 1'-0"

Date:
January 25, 2011
Revisions:

Watauga County Tourism Development Authority
Trail Head Gateway
Watauga County, North Carolina

595 Glendale Dr
Boone, NC 28607
(828) 268-9946
marlandarchitecture@gmail.com
Marland Architecture

DRAWING
A2
PLAN & ELEVATION

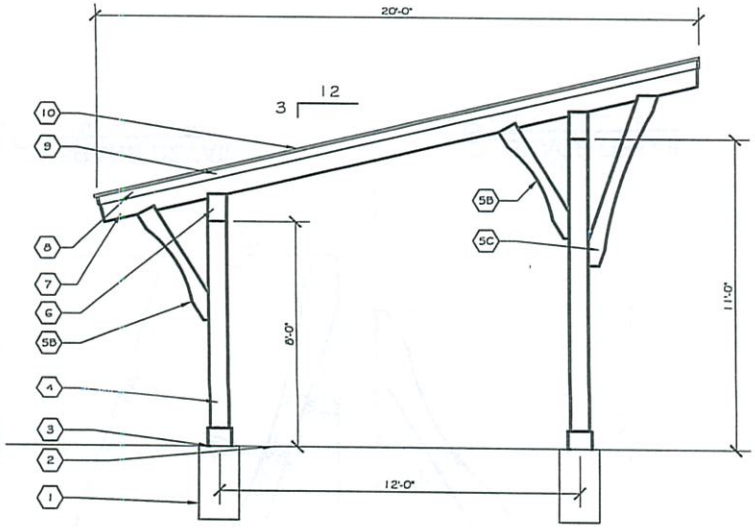

1 ELEVATION - LONG SIDE
SCALE: 1/4" = 1'-0"

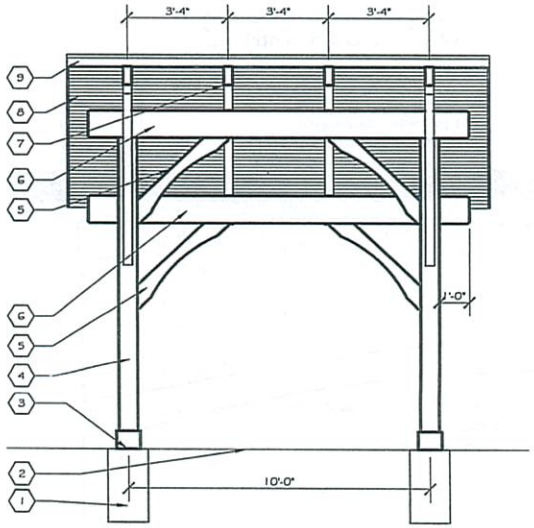

2 ELEVATION - SHORT SIDE
SCALE: 1/4" = 1'-0"

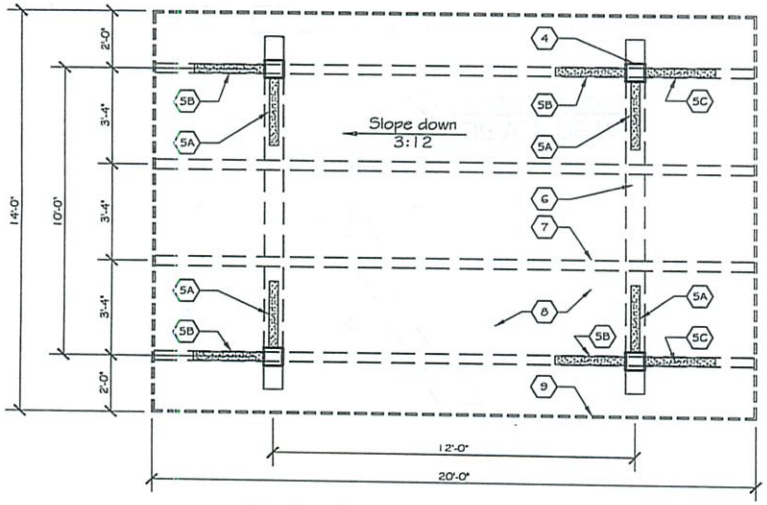

3 PLAN
SCALE: 1/4" = 1'-0"

Note: Slab and tables not part of project. Some details not shown including timber chamfering, fascia, and gutter/downspout.

4 3D VIEW
SCALE: NONE

GENERAL NOTES:

1. Timber frame joinery detailing and engineering shall be provided by the timber frame craftsman, however, exposed fasteners will not be accepted. Timber frame supplier shall submit detailed shop drawings to the architect and Owner for approval prior to fabrication.
2. All Douglas Fir timber components shall be grade #1 & Better FOHC (Free-of-heart-center) and green/partially air dried.
3. Finish on post, beams, braces and roof deck/ceiling shall be two coats of Sikkens Cetol SRD or similar (please note in bid) applied per manufacturer's omstructions. Color shall be selected by the Owner.
4. Contractor may propose bid alternates for wood species other than those noted where there may be opportunity for use of local materials or cost savings for the Owner.

KEYED NOTES:

1. Concrete footing 30" deep to flush with finish grade. Refer to Detail D/A2.
2. Pad for tables shall be 2" of pea gravel over 2" of small crusher run type gravel.
3. Post base to footing connection shall be Simpson Strong Tie ABU88 or approved equal installed per manufacturer's instructions. Wrap base with 1x8 cedar trim to hide connector.
4. 8x8 Doug Fir post - chamfer edges ½" typical to within 4" from grade and beams.
5. 4x8 bracing per details A, B, & C
6. 8x12 Doug Fir beam - chamfer edges and ends ½" typical
7. 4x8 Doug Fir rafters with birdsmouth cuts at beams and braces as shown.
8. 2x6 spruce T&G decking
9. 1x4 cedar fascia board
10. "Classic Rib" metal roofing, 29 gauge, 38" wide with 40 year min. color warranty and matching flashing and gutter/ downspout on lowest edge. Install metal roofing per manufacturer's instructions appropriate for local wind codes. Color shall be selected by Owner

Date:
January 27, 2011
Revisions:

Watauga County Tourism Development Authority
Picnic Pavilion - Small
Watauga County, North Carolina

393 Glendale Dr
Boone, NC 28607
(828) 268-9946
mdarchitecture@gmail.com
Marland Architecture

DRAWING
A1
PLAN & ELEVATIONS

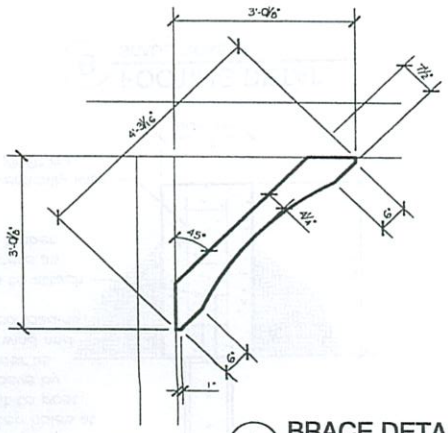

A BRACE DETAIL
SCALE: 1/2" = 1'-0"

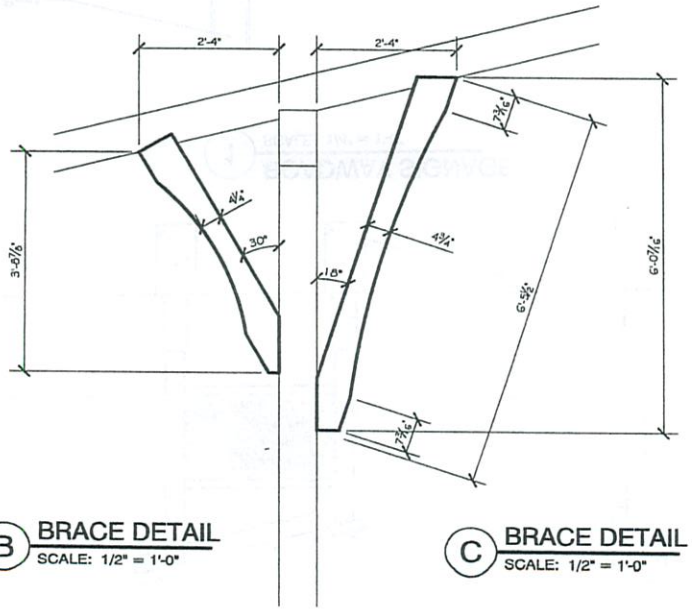

B BRACE DETAIL
SCALE: 1/2" = 1'-0"

C BRACE DETAIL
SCALE: 1/2" = 1'-0"

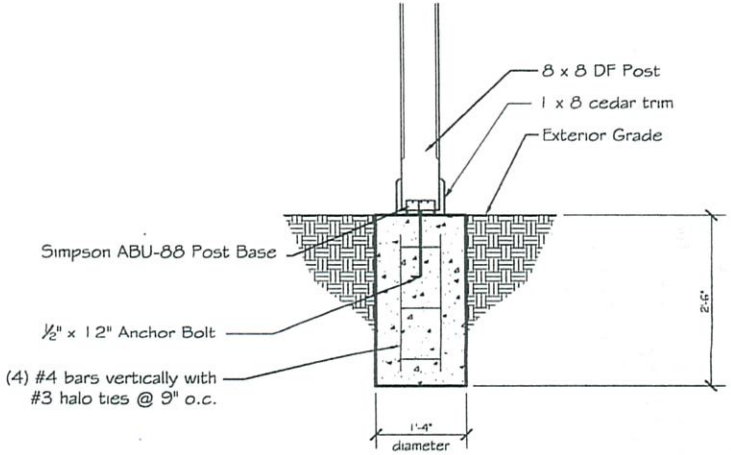

D FOOTING DETAIL
SCALE: NONE

Date:
January 27, 2011
Revisions:

Watauga County Tourism Development Authority
Picnic Pavilion - Small
Watauga County, North Carolina

393 Glendale Dr
Boone, NC 28607
(828) 268-9946
marlandarchitecture@gmail.com
Marland Architecture

DRAWING
A2
DETAILS

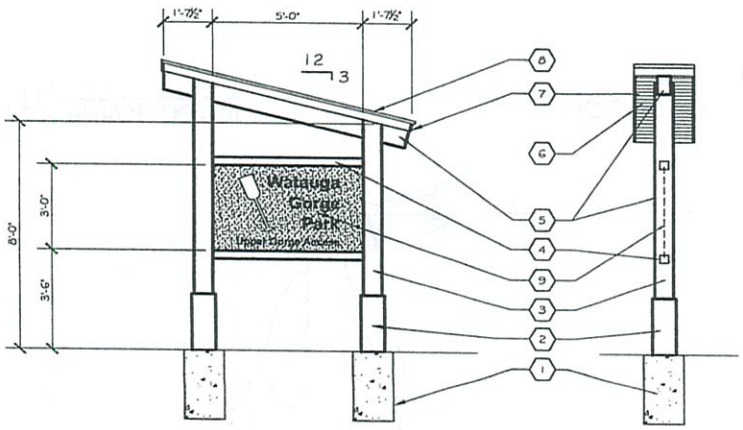

1 ROADWAY SIGNAGE
SCALE: 1/4" = 1'-0"

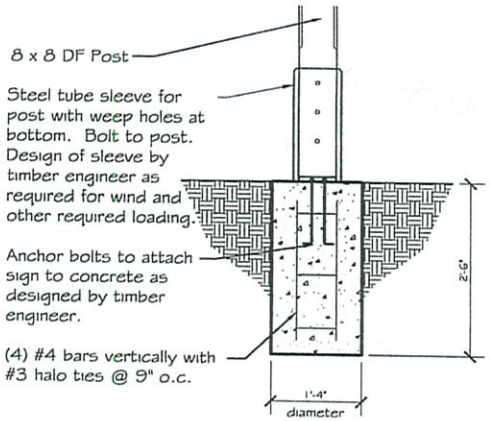

B FOOTING DETAIL
SCALE: NONE

GENERAL NOTES:

1. Timber frame joinery detailing and engineering shall be provided by the timber frame craftsman, however, exposed fasteners will not be accepted. Timber frame supplier shall submit detailed shop drawings to the architect and Owner for approval prior to fabrication.
2. All Douglas Fir timber components shall be grade #1 & Better FOHC (Free-of-heart-center) and green/partially air dried.
3. Finish on post, beams, braces and roof deck/ceiling shall be two coats of Sikkens Cetol SRD or similar (please note in bid) applied per manufacturer's instructions. Color shall be selected by the Owner.
4. Contractor may propose bid alternates for wood species other than those noted where there may be opportunity for use of local materials or cost savings for the Owner.

KEYED NOTES:

1. Concrete footing 30" deep to flush with finish grade. Refer to Detail B.
2. Post to footing connection shall be a steel tube sleeve anchored to the concrete and bolted through the post or other connection as appropriate for wind and other loading forces. Design by timber frame engineer.
3. 8x8 Doug Fir post - chamfer edges ½" typical to within 4" from grade and beams.
4. 4x4 Doug Fir top and bottom sign support with chamfered edges.
5. 6x8 Doug Fir with birdsmouth cuts at beams and braces as shown and chamfered edges and ends ½" typical
6. 2x6 spruce T&G decking
7. 1x4 cedar fascia board
8. "Classic Rib" metal roofing, 29 gauge, 36" wide with 40 year min. color warranty and matching flashing. Install metal roofing per manufacturer's instructions appropriate for local wind codes. Color shall be selected by Owner.
9. 1/2" thick aluminum panel with water jet cut-outs and powder coat finish in color selected by the Owner. Signage (by Owner) shall be attached to the aluminum panel.

MARLAND CLARK MARLAND
REGISTERED ARCHITECT
NORTH CAROLINA
BOONE, NC

Date:
February 16, 2011
Revisions:
ADDED PAGE JULY 28, 2011

Watauga County Tourism Development Authority
Miscellaneous Signage
Watauga County, North Carolina

393 Glendale Dr
Boone, NC 28607
(828) 268-9946
marlandarchitecture@gmail.com
Marland Architecture

DRAWING
A2
ELEVATIONS & DETAIL

AGENDA ITEM 8:

BRUSH GRINDING BID AWARD REQUEST

MANAGER'S COMMENTS:

Bids were solicited by the Sanitation Department for brush grinding services at the landfill. Two out of the three contractors notified submitted bids with Superior Mulch, LLC providing the lowest price at $16.75 per ton. Superior Mulch, LLC currently provides the grinding services for the County.

Staff recommends the Board accept Superior Mulch, LLC's bid for $16.75 per ton, which includes grinding and hauling off of the material. Appropriate funds have been budgeted in the Sanitation Department's budget to cover the contract. Board action is requested.

Blank Page

MEMO

Date: 8/24/2011

To: Deron Geouque, County Manager

From: JV Potter, OSD

Re: Brush Grinding

The Sanitation Department solicited bids for our brush grinding services. We have approximately 2000 ton of brush and stumps on site. Only two bids were received and they are as follows:

Superior Mulch, LLC.....$16.75 per ton

Eggers Construction.....$24.25 per ton

Henson's Inc.....No Bid

This proposal includes grinding and hauling of the material and will be valid until June 30, 2012 with an estimated 6000 ton for the fiscal year. I am requesting the Board approve the low bid from Superior Mulch in the amount of $16.75 per ton. There are sufficient funds to cover the cost of the services.

Please advise.

Blank Page

AGENDA ITEM 9:

PLANNING AND INSPECTIONS OUT-OF-STATE TRAVEL REQUEST

MANAGER'S COMMENTS:

Mr. Furman will present a request for out-of-state travel for Steve Sudderth to attend the International Code Council Annual Conference and Final Action Hearings in Phoenix, Arizona on October 29 through November 5, 2011. All expenses will be covered by the NC Building Inspectors Association. Board approval is requested.

Blank Page

WATAUGA COUNTY

Department of Planning & Inspections

331 Queen Street Suite A • Boone, North Carolina 28607

Phone (828) 265-8043
TTY 1-800-735-2962
Voice 1-800-735-8262
or 711
FAX (828) 265-8080

RECEIVED
AUG 30 2011

Memorandum

Date: August 30, 2011

To: Deron Geouque

From: Joe Furman

RE: Out-of-state travel

This is to request approval for Steve Sudderth to attend the International Code Council Annual Conference and Final Action Hearings in Phoenix, Arizona October 29-November 5, 2011. The NC Building Inspectors Association will cover all expenses, as Steve will represent the Association and vote for it on code proposals. In addition, he will attend a half-day session on the 2012 Fire Code.

Become an Exhibitor
Sponsor/Advertiser
Registration
Conference Schedule
Education
Hotel & Travel
Events
Expo Floorplan

Become a

E-mail This page Bookmark This Page

Welcome

Registration

ICC Expo

What's New

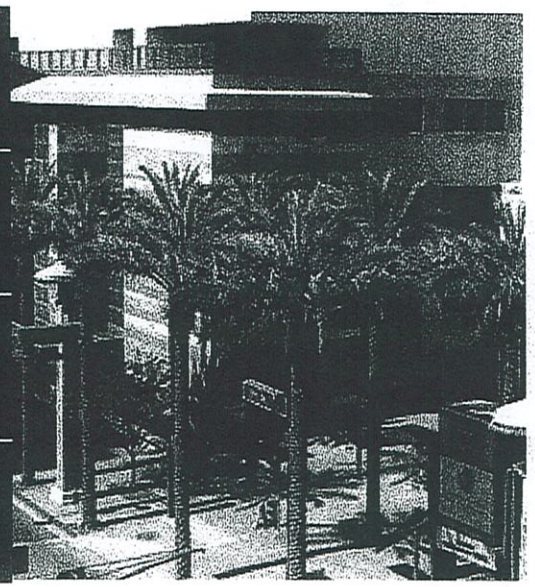

Welcome

NEW CODES: IgCC & ISPSC

Join us for the International Code Council 2011 Annual Conference and Final Action Hearings, October 30 – November 6, at the Phoenix Convention Center.

Sponsors

SAFE AND SUSTAINABLE

powered by eSHOW™

Welcome

Join us in Phoenix, Arizona, for the **International Code Council 2011 Annual Conference and Final Action Hearings**, October 30 – November 6, at the Phoenix Convention Center.

Annual Conference activities include **special guest presenters**, the **Board Candidates' Forum**, the **Annual Business Meeting** and **Board elections**, the inaugural **Membership Councils' meetings**, **award presentations**, **forums**, **regional meetings**, **valuable networking opportunities**, and much more.

The Conference will also feature informative educational sessions for **building safety**, **fire prevention**, **sustainability**, and other construction industry professionals. These sessions are designed to help you increase your understanding and application of the International Codes, while *earning CEUs and LUs*.

We also invite you to visit the **International Code Council Expo**. The Expo will showcase the latest building and sustainability products, services, and technology. Discover how these products can make your job easier and help improve your efficiency.

This year's Annual Conference includes the Final Action Hearings for the two newest International Codes, the **2012 *International Green Construction Code*** and the **2012 *International Swimming Pool and Spa Code***. The hearings will give all attendees the opportunity to voice their opinions about proposed code changes, which will result in the first edition of each as a full-fledged model code. Both codes are expected to be published in March 2012.

As always, there will be a wide range of opportunities for you to meet old friends, make new ones and share information with colleagues.

To register for conference, educational sessions and other events, please *click here*.

Stay Up To Date With

11:15 AM - 12:45 PM	Crackerbarrel Luncheon
1:00 PM - 3:00 PM	Government Relations Forum
1:00 PM - 4:15 PM	Education Programs Sponsored by Target
1:30 PM - 3:30 PM	Past Presiding Officers Meeting
1:30 PM - 5:30 PM	IAS Building Department and Fire Prevention Department Lead Evaluator Training Class http://www.iasonline.org/Training_Agencies/Phoenix-flyer.pdf.
3:15 PM - 5:15 PM	Major Jurisdiction Committee
4:00 PM - 8:00 PM	Expo
4:30 PM - 6:00 PM	Delegate Photos
6:00 PM - 8:00 PM	Exhibitor Reception Sponsored by Underwriters Laboratories and ICC Evaluation Service
8:00 PM - 10:00 PM	Hospitality Extravaganza

Wednesday, November 2

7:00 AM - 5:00 PM	Registration / Bookstore
8:00 AM - 11:00 AM	Companion Breakfast Program
8:00 AM - 11:15 AM	Education Programs Sponsored by Target
8:00 AM - 4:00 PM	IAS Building Department and Fire Prevention Department Lead Evaluator Training Class http://www.iasonline.org/Training_Agencies/Phoenix-flyer.pdf.
11:30 AM - 1:00 PM	Awards Luncheon
1:30 PM - 5:00 PM	Final Action Hearings
6:00 PM - 10:00 PM	Annual Banquet Reception Sponsored by American Gas Association
10:00 PM - 12:00 AM	Planet Northwest Hospitality Reception

Thursday, November 3

7:00 AM - 5:00 PM	Registration
8:00 AM - 4:00 PM	Certification Testing http://www.iccsafe.org/Phoenix-Exam
8:00 AM - 8:00 PM	Final Action Hearings
8:30 AM - 3:00 PM	ICC Board of Directors Meeting

Friday, November 4

7:00 AM - 5:00 PM	Registration
8:00 AM - 4:00 PM	Certification Testing http://www.iccsafe.org/Phoenix-Exam
8:00 AM - 8:00 PM	Final Action Hearings

Saturday, November 5

7:00 AM - 5:00 PM	Registration
8:00 AM - 8:00 PM	Final Action Hearings

Sunday, November 6

7:00 AM - 5:00 PM	Registration
8:00 AM - 8:00 PM	Final Action Hearings

AGENDA ITEM 10:

TAX MATTERS

A. Monthly Collections Report

MANAGER'S COMMENTS:

Tax Administrator Kelvin Byrd will present the monthly collections report and be available for questions and discussion. No Board action is required as the report is for information only.

Blank Page

AGENDA ITEM 10:

TAX MATTERS

B. Refunds and Releases

MANAGER'S COMMENTS:

Mr. Byrd will present the Refunds and Releases Report. Board action is required to accept the Refunds and Releases Report.

Blank Page

AGENDA ITEM 11:

FINANCE MATTERS

A. Juvenile Crime Prevention Council (JCPC) Grant Request

MANAGER'S COMMENTS:

Finance Matters

The Juvenile Crime Prevention Council (JCPC) will request permission from the Board to apply for a grant to serve Court Category 2 youth as outlined in the attached Request for Proposals (RFP). The County would not be required to provide any matching funds. The application deadline is September 15, 2011.

Board action is requested.

Blank Page

Department of Juvenile Justice and Delinquency Prevention
JCPC Level 2 Dispositional Alternatives Projects
Request for Proposals

I. Introduction

The 2011 Session of the North Carolina General Assembly required that the Department of Juvenile Justice and Delinquency Prevention through **SESSION LAW 2011-391** expend funds to serve high-risk adjudicated youth through four different options. This Request for Proposals seeks to address two of those options: 1) Regional programs that are collaboratives of two or more Juvenile Crime Prevention Councils which provide Level 2 intermediate dispositional alternatives for juveniles. 2) Juvenile Crime Prevention Council grant funds to be used for Level 2 intermediate dispositional alternatives for juveniles listed in G.S. 7B-2506(13) through (23) S*ee* ***Attachment A***.

The Department will be awarding selected grants, which will range from $50,000 to **$150,000 per county**, to single counties or to multicounty collaboratives of two more Juvenile Crime Prevention Councils to fund dispositional alternatives for Level 2 adjudicated youth.

Under this request for proposals, priority will be given to applications proposing services that match characteristics of programs proven effective in reducing recidivism of youth under the supervision of the court. (More detail is available in the Required Elements Section of this RFP.) Projects that do not match this research must provide an evidence-based rationale to support the effectiveness of the proposed project for reducing recidivism of youth served.

The Department is issuing this Request for Proposals to counties and their Juvenile Crime Prevention Councils to invite submissions of proposals for these funds.

II. Eligibility

Local units of government or not-for-profit youth-serving agencies in cooperation with their local Juvenile Crime Prevention Council (JCPC) or in cooperation with a collaborative of two or more JCPCs who are interested in providing evidence-based intervention programming for Level 2 youth are eligible to apply. Agencies must demonstrate that they have a proven track record of working with at-risk youth, an organizational capacity for accountability, and the ability to begin operations quickly and efficiently.

Multi-county proposals submitted by the administering county must be accompanied by letters detailing county support from Chairperson of Commissioners or County Manager and JCPC Chairpersons of all counties included in the proposals.

III. Target Population

Clients targeted for services are Level 2 youth who are court involved. Providers are encouraged to include services for the youth's families also. To see the number of Level 2 dispositions in your county for the last three years please reference ***Attachment C.***

IV. Required Elements

A. Proposals must be submitted to the DJJDP Central Office prior to 5:00 PM September 15, 2011. One copy with original signatures and nine copies of the complete proposal must be submitted.

B. Only complete proposals on the form included with this RFP will be considered for selection.

C. Only proposals with the three following signatures will be accepted:
- **Chairperson of County Commissioners or County Manager**
- **County JCPC Chairperson and**
- **Program Provider**

D. Applicants **MUST** choose programs from

OJJDP's Model Programs Guide:
http://www.dsgonline.com/MPG25_Local/MPGSearch/WebForm2_Demo.aspx.

OR

OJJDP's Strategic Planning Tool:
http://www.iir.com/nygc/tool/default.htm

OR

Use the guidelines found under the Priority Services found as ***Attachment E.***

E. Programs the Department would like to fund include:
   a. Community Day Treatment Programs
   b. Vocational Programs
   c. Gang Intervention Programs
   d. Restorative Justice Programs
   e. Clinical Treatment Programs
   f. Residential Programs

F. The proposed program must fill a gap in the service delivery continuum within the local community. Services that are a duplication of efforts already being undertaken in the local community will not be funded; however, programs can expand current programming by serving more youth and higher-risk youth.

G. The proposed program must address the risk data found in ***Attachment D*** of this RFP.

V. Funding

Funding for selected programs will begin October 1, 2011 and end September 30, 2012. Continuation funds, *if available*, will continue for the period October 1, 2012 through September 30, 2013 for projects that implement their services successfully as proposed during the first year of service.

Counties are identified in four (4) funding categories according to the size of their youth population. Categories reflect the **total amount of funding available** per county annually:

- Category 1 counties (fewer than 5,000) are eligible for a grant request of $50,000.
- Category 2 counties (5,001 to 10,000) are eligible for a grant request of $100,000.
- Category 3 counties (10,001 to 20,000) are eligible for a grant request of $125,000.
- Category 4 counties (20,001 and larger) are eligible for a grant request of $150,000.

To identify your county's category please reference ***Attachment B***.

Multi-county projects which **can be a combination of any categories** are eligible to apply for the level of funding based on their combined county eligibility amounts. For example, if a two county collaborative is applying for funding and one county is eligible to apply for $50,000 and its partner is eligible to apply for $100,000, then the collaborative may apply for a total of $150,000.

VI. Required Match

These funds require no local match, but priority will be given to proposals that demonstrate community support with cash or in-kind resources, including but not limited to county appropriations or Medicaid reimbursements. Proposals that include community cash or in-kind resources in the project budget must include documentation of the intent to provide that support and justification of the value claimed.

VII. Timeline for RFP and Program Implementation:

July 25, 2011 - Request for Proposals by Secretary Linda Hayes released to County Commissioners and Juvenile Crime Prevention Councils

September 15, 2011 - Proposals due to State DJJDP Office

October 1, 2011 - Announcement and notification of Grant Awards by Secretary Linda Hayes

October 15, 2011 - Program Agreements submitted by selected counties for selected programs to the DJJDP State office by 5:00 pm

November 1, 2011 - Approved program agreements returned to selected counties and funding begins.

September 1, 2013 - Program agreements for 2012-13 submitted by selected counties to DJJDP State office.

September 15, 2005 - Counties with expected program implementation results through August 2012 receive approved program agreements for 2012-13 from DJJDP.

VIII. Selection Process:

The DJJDP State Office Review Team will review and rate proposals based on RFP guidelines selecting proposals that meet the requirements and giving priority to those proposals that rank highest on the selection factors identified in the RFP. The State Review Team will be chaired by the Deputy Secretary for Community Programs and comprised of Area Consultants and selected Chief Court Counselors.

The DJJDP State Office Review Team will review the proposals submitted and select proposals to submit to Secretary Linda Hayes and the Executive Management Team for funding approval. Consideration will be given to a variety of county proposals that target counties with high numbers of Level 2 dispositions, rural counties, geographical representation, community collaboration as well as program services based upon research indicating outcomes of reduced recidivism for youth under the supervision of juvenile court.

IX. Contact Information

Questions about the RFP or submission of required documents in response to the RFP should be directed to William Lassiter, Director of Community Programs at (919) 743-8124, (william.lassiter@djjdp.nc.gov) or to the DJJDP Area Consultant assigned to your county.

Attachment B
County Categories for Funding

County	Population 10-17	County	Population 10-17	County	Population 10-17
CATEGORY 1		CATEGORY 2		CATEGORY 3	
Alexander	4,047	Brunswick	9,266	Alamance	15,680
Alleghany	989	Caldwell	8,420	Burke	10,097
Anson	2,804	Carteret	5,481	Cabarrus	19,084
Ashe	2,324	Chatham	5,643	Catawba	17,022
Avery	1,529	Columbus	6,172	Cleveland	11,353
Beaufort	4,638	Craven	9,497	Davidson	17,020
Bertie	2,186	Duplin	6,134	Harnett	12,974
Bladen	3,580	Edgecombe	6,238	Iredell	17,482
Camden	1,072	Franklin	6,452	Johnston	18,208
Caswell	2,444	Granville	5,996	Nash	10,764
Cherokee	2,461	Halifax	6,230	New Hanover	17,559
Chowan	1,508	Haywood	5,286	Onslow	16,518
Clay	821	Henderson	9,374	Orange	11,770
Currituck	2,534	Hoke	5,445	Pitt	15,946
Dare	2,951	Lee	6,299	Randolph	15,417
Davie	4,560	Lenoir	6,632	Robeson	16,529
Gates	1,399	Lincoln	8,111	Rowan	15,184
Graham	788	Moore	8,247	Wayne	13,152
Greene	2,360	Pender	5,206	CATEGORY 4	
Hertford	2,561	Richmond	5,558	Buncombe	22,147
Hyde	427	Rockingham	9,464	Cumberland	36,421
Jackson	3,045	Rutherford	6,742	Durham	25,082
Jones	1,124	Sampson	7,552	Forsyth	37,009
Macon	3,184	Stanly	6,629	Gaston	21,497
Madison	1,992	Stokes	5,145	Guilford	50,249
Martin	2,687	Surry	8,093	Mecklenburg	93,893
McDowell	4,468	Vance	5,402	Union	22,736
Mitchell	1,461	Wilkes	6,845	Wake	93,573
Montgomery	3,063	Wilson	9,113		
Northampton	2,245				
Pamlico	1,118				
Pasquotank	4,077				
Perquimans	1,224				
Person	3,965				
Polk	1,738				
Scotland	4,818				
Swain	1,519				
Transylvania	2,900				
Tyrrell	366				
Warren	2,099				
Washington	1,465				
Watauga	3,250				
Yadkin	4,225				
Yancey	1,768				

Blank Page

AGENDA ITEM 11:

FINANCE MATTERS

B. Surplus Requests

MANAGER'S COMMENTS:

Ms. Pierce will request that the Board surplus the Animal Care & Control building, fixtures, fencing, and contents and a 2000 John Deere Loader.

The Animal Care & Control building will be demolished and some items will be surplused to the Humane Society. In order for the Board to donate items to the Humane Society the attached resolution would need to be adopted at the September 20, 2011, meeting. Per North Carolina General Statutes, the resolution may not be adopted until five (5) days of advertisement in the local newspaper.

The loader will be sold by electronic auction through GovDeals.

Board action is requested.

Blank Page

BCC 9-6-2011

WATAUGA COUNTY

FINANCE OFFICE

814 West King St., Suite 216 - Boone, NC 28607 - Phone (828) 265-8007
Fax (828) 265-8006

MEMORANDUM

TO: Deron Geouque, County Manager
Margaret Pierce, Finance Director

FROM: Tammy Adams, Accounting Technician

SUBJ: Surplus Items Request

DATE: August 29, 2011

Animal Care & Control Facility & Contents

I am requesting that the Board of Commissioners declare the Animal Care & Control building (Asset# 00115), fixtures, fencing, and contents as surplus. I am requesting approval for the building to be demolished and all other contents to be disposed of in accordance with NC General Statues and established Watauga County policies.

2000 John Deere Loader

The Sanitation Department is in the process of purchasing a new wheel loader and plans to surplus a 2000 John Deere 644H Loader, Asset# 10707, when the new loader arrives in approximately three months. Our previous auction of a similar item closed for over $30,000 and therefore in accordance with General Statute §160A-266, I am requesting the Board's approval to sell this item at electronic auction via GovDeals.

STATE OF NORTH CAROLINA

DRAFT

COUNTY OF WATAUGA

RESOLUTION OF THE
WATAUGA COUNTY BOARD OF COMMISSIONERS
AUTHORIZING CONVEYANCE OF SURPLUS PROPERTY BY DONATION

WHEREAS, the County of Watauga will be closing their Animal Care and Control office and has surplus property they desire to donate to the Watauga Humane Society, an incorporated nonprofit agency; and

WHEREAS, the Watauga Humane Society is near completion of their new facility and due to an Agreement with Watauga County dated May 3, 2010, will have need for these surplus items; and

WHEREAS, North Carolina General Statute § 160A-280 permits a County to donate any personal property it deems to be surplus, obsolete, or unused to an incorporated nonprofit organization according to the procedures prescribed in 160A-280(a).

NOW THEREFORE BE IT RESOLVED by the Watauga County Board of Commissioners as follows:

1. The Watauga County Board of Commissioners hereby authorizes the donation of the following described surplus property to the Watauga Humane Society:

   (3) Plastic Food Barrels
   (1) Metal Can With Wheels
   (6) Large Plastic double Food Bowls
   (1) Large Plastic Garbage Can
   (1) Whirlpool Washing Machine
   (1) Hotpoint Dryer
   (1) Frigidaire Dishwasher
   (8) Single Stainless Steel Cat Cages
   (2) Double Stainless Steel Cat Cages
   (1) Mop Bucket
   (1) Dry Erase Board
   (15) Cat Litter Boxes
   (25) Stainless Bowls for Cats
   (35) Stainless Bowls for Dogs
   Several Blankets and Towels

2. This Resolution is adopted pursuant to the provisions of North Carolina General Statute 160A-280.

ADOPTED this the 6th day of September, 2011.

_____
Nathan A. Miller, Chairman
Watauga County Board of Commissioners

ATTEST:

(SEAL)

_____
Anita J. Fogle, Clerk to the Board

AGENDA ITEM 11:

FINANCE MATTERS

C. Real Property Sale Request

MANAGER'S COMMENTS:

Ms. Pierce will present two resolutions 1) authorizing the use of electronic auctions for the sale of real property; and 2) a resolution authorizing the sale of real property located at 103 Windridge Road, Charter Hills, Lot D-32, Beech Mountain, NC.

The first resolution would allow the County to dispose of real property through electronic auctions. This option would allow the County to more efficiently dispose of real property while also reducing staff time and costs for advertisement. The first resolution establishes the electronic auction method; the second resolution is required to be adopted each and every time real property is sold by this process.

Staff requests the Board adopt the resolution authorizing the establishment of the electronic auction process and the resolution authorizing the sale of property located at 103 Windridge Road, Charter Hills, Lot D-32, Beech Mountain, NC. Board action is required.

Blank Page

WATAUGA COUNTY
FINANCE OFFICE

814 West King St., Room 216 - Boone, NC 28607 - Phone (828) 265-8007 Fax (828) 265-8006

RECEIVED
AUG 30 2011

MEMORANDUM

TO: Deron Geouque, County Manager

FROM: Margaret Pierce, Finance Director

SUBJECT: Sale of Real Property

DATE: August 30, 2011

Attached please find two resolutions. The first is a resolution authorizing the establishment of an electronic auction procedure authorizing the use of electronic auction services. County Attorney Four Eggers wrote this resolution to assist staff in current and future disposals of real property by electronic advertisement to reduce costs and create a more effective process of disposal of real property no longer needed or required by the County. This resolution is a onetime action to establish a County policy.

The second resolution would only need action by the Board if the above referenced resolution is approved. If the advertisement and sale of real property by electronic means is approved, the resolution to authorize the sale of property located at 103 Windridge Road, Charter Hills, Lot D-32, Beech Mountain, NC. This property was donated to Watauga County by the Estate of Weston Olberg in 2010. The property is approximately .36 acres and can be referenced at PIN #1950-46-8323-000. The Board previously declared this property surplus and requested staff determine the appropriate disposal method. The County Attorney researched with staff and the electronic method of advertising and sale was deemed the most cost effective. The County Attorney also wrote the enclosed resolution for this sale. After bids are received, the high bid will be presented to the Board and can be accepted or rejected by the Board.

The second type resolution will be presented each time the County has real property to sell and deems the best method is electronic advertisement and sale.

Separate Board actions on the attached resolutions are requested.

STATE OF NORTH CAROLINA

DRAFT

COUNTY OF WATAUGA

RESOLUTION OF THE
WATAUGA COUNTY BOARD OF COMMISSIONERS
AUTHORIZING THE ESTABLISHMENT OF AN ELECTRONIC AUCTION PROCEDURE/
AUTHORIZING THE USE OF EXISTING PRIVATE OR PUBLIC ELECTRONIC AUCTION SERVICES

WHEREAS, the County of Watauga, from time to time, has real property which is no longer needed or required; and

WHEREAS, North Carolina General Statute 153A-176 authorizes the Board of Commissioners to dispose of any real or personal property belonging to it according to the procedures prescribed in Chapter 160A, Article 12; and

WHEREAS, North Carolina General Statute 160A-270(c) provides that auctions of real property may be conducted electronically if the County authorizes the establishment of an electronic auction procedure or authorizes the use of existing private or public electronic auction services; and

WHEREAS, an auction website located at govdeals.com provides a venue for effectively and efficiently selling county property; and

WHEREAS, North Carolina General Statute 160A-270(c) provides that notice of all electronic sales may be published solely by electronic means if that exclusive method of publication is approved by the governing board of the political subdivision; and

WHEREAS, The Board of Commissioners now desire to adopt procedures for the disposal and exchange of surplus real property by electronic means and for the exclusive method of publication also being by electronic means.

NOW THEREFORE BE IT RESOLVED by the Watauga County Board of Commissioners as follows:

1. Property That Can be Disposed of Under this Resolution. The County Manager is hereby authorized to declare surplus and place at auction real property owned by the County of Watauga when, in his or her judgment, each of the following criteria are met:

   a) The property is no longer necessary for the conduct of County business; and

   b) Sound property management principles and financial considerations indicate that the interests of the County of Watauga would be best served by disposing of the property.

2. Methods of Disposition. The County Manager or his designee may advertise for sale Real Property by any means which he or she judges reasonably calculated to secure for the County the fair market value in money or other consideration and to accomplish the disposal efficiently and economically, including but not limited to the methods of sale provided in Article 12 of North Carolina General Statutes, Chapter 160A-266 and 160A-270. All sales shall be contingent upon, and may only be completed by and affirmative vote of the County Commissioners confirming such sale.

3. Sale by Electronic Auction. As one of several means of disposing of surplus property, the County Manager is specifically authorized to dispose of Surplus Property by electronic means. The County Manager is authorized to establish procedures for disposing of Surplus Property by electronic means, and is further authorized to use existing public or private electronic auction services to dispose of Surplus Property. In accordance with North Carolina General Statute 160A-270, the County shall not be required to provide advance notice of electronic auctions of such Surplus Property and this resolution serves as approval by the governing board of the county that notice may be published solely by electronic means for all auctions.

4. Terms of Disposition. The Surplus Property shall be sold to the party who tenders the highest bid if the County Commissioners then approve such bid. After bids have been received, the highest bid shall be reported to the Commissioners, and the Commissioners shall accept or reject it within 30 days thereafter. If the bid is rejected, the Commissioners may re-advertise the property for sale.

5. Records and Reports. The County shall keep a record of all property sold under the authority of this Resolution and that record shall describe the property sold or exchanged, to whom it was sold, or with whom it was exchanged, and the amount of money or other consideration received for such sale or exchange. These records shall be kept in accordance with the records retention schedule set forth by the State of North Carolina.

6. This Resolution is adopted pursuant to the provisions of North Carolina General Statutes 153A-176, 160A-266, and 160A-270.

7. This Resolution shall become effective upon adoption.

ADOPTED this the 6th day of September, 2011.

_____

Nathan A. Miller, Chairman
Watauga County Board of Commissioners

ATTEST:

(SEAL)

_____

Anita J. Fogle, Clerk to the Board

STATE OF NORTH CAROLINA

DRAFT

COUNTY OF WATAUGA

RESOLUTION OF THE
WATAUGA COUNTY BOARD OF COMMISSIONERS
AUTHORIZING THE SALE OF CHARTER HILLS LOT D 032

WHEREAS, the County of Watauga owns a 0.36 acre tract located at 103 Windridge Road, about 216 feet northeast of Upper Grouse Ridge Road, and known as Charter Hills D 032, Parcel ID 1950468323000 in the Watauga County tax maps; and

WHEREAS, North Carolina General Statute § 153A-176 permits a County to dispose of any real or personal property belonging to it according to the procedures prescribed in Chapter 160A, Article 12; and

WHEREAS, North Carolina General Statute § 153A-176 permits the County to sell real property by electronic advertisement and public auction; and

WHEREAS, North Carolina General Statute § 160A-270(c) provides that auctions of real property may be conducted electronically if the County authorizes the establishment of an electronic auction procedure or authorizes the use of existing private or public electronic auction services; and

WHEREAS, the County has passed a Resolution authorizing the establishment of an electronic auction procedure and the use of existing public and private electronic auction services; and

WHEREAS, North Carolina General Statute § 160A-270(c) provides that notice of all electronic sales may be published solely by electronic means if that exclusive method of publication is approved by the governing board of the political subdivision; and

WHEREAS, The Board of Commissioners has adopted a Resolution for the exclusive method of publication being by electronic means.

NOW THEREFORE BE IT RESOLVED by the Watauga County Board of Commissioners as follows:

1. The Watauga County Board of Commissioners hereby authorizes the sale of the following described tract of land by existing private electronic auction services at www.govdeals.com:

   Being all of Lot D32, Charter Hills, Beech Mountain Subdivision, as more particularly shown on a plat recorded in Plat Book 7 at Page 4, Watauga County Registry.

2. The County will accept bids for the property until 3:00 p.m. Tuesday, October 4, 2011.

3. 3:00 P.M. on Tuesday, October 4, 2011 is the deadline for bidding. The record of bids shall be reported to the Board of Commissioners at their regular meeting on Tuesday, October 18, 2011.

4. The minimum opening bid for this property shall be $1,500.00.

5. The Board of Commissioners will determine the highest responsible bidder for the property and has discretion to award the bid.

6. To be responsible, a bid must be accompanied by a bid deposit of five percent (5%) of the amount of the bid. The deposit of the bidder to whom the award is made will be held until the sale of the property is closed; if that bidder refuses at any time to close the sale, the deposit will be forfeited to the County. The deposits of other bidders will be returned at the time the Board of Commissioners awards the property to the highest responsible bidder. Such bid deposits shall be made through the govdeal.com website in accordance with their standard practices.

7. In addition, to be responsible, a bidder must be current on payment of all property taxes owed to the county.

8. The County reserves the right to withdraw the property from sale at any time and the right to reject all bids.

9. This Resolution is adopted pursuant to the provisions of North Carolina General Statutes § 153A-176, 160A-266, and 160A-270.

ADOPTED this the 6th day of September, 2011.

_____

Nathan A. Miller, Chairman
Watauga County Board of Commissioners

ATTEST:

(SEAL)

_____

Anita J. Fogle, Clerk to the Board

Blank Page

AGENDA ITEM 12:

MISCELLANEOUS ADMINISTRATIVE MATTERS

A. Caldwell Community College and Technical Institute (CCC&TI) Joint Meeting Request

MANAGER'S COMMENTS:

Mr. Ken Boham requests a joint meeting with the Board of Commissioners and the Trustees of Caldwell Community College and Technical Institute be scheduled for September 21, 2011, at 6:00 P.M. at the Watauga Instructional Facility on Hwy 105 Bypass, Room 112.

Staff seeks direction from the Board.

Blank Page

BCC 9-6-2011

Caldwell Community College and Technical Institute

Office of the President

RECEIVED
AUG 26 2011

August 25, 2011

Mr. Deron Geouque
Watauga County Manager
814 West King Street, Suite 205
Boone, NC 28607

Dear Mr. Geouque:

The Trustees of Caldwell Community College and Technical Institute would like to schedule a joint meeting of the College Board of Trustees and the Watauga County Commissioners on Wednesday, September 21, 2011 at 6:00 p.m. at the Watauga Instructional Facility on Hwy 105 By-pass Room 112.

Will you please check the date and time and let me or my assistant, Donna Church, know either by e-mail: dchurch@cccti.edu or phone: 828-726-2210, if September 21, 2011 at 6:00 p.m. will accommodate the Watauga County Commissioners' schedule.

Sincerely,

Kenneth A. Boham
President

dlc

2855 Hickory Blvd., Hudson, NC 28638 • 828.726.2210
Email: kboham@cccti.edu • Fax: 828.726.2300 • www.cccti.edu

An Equal Opportunity Educator & Employer

Blank Page

AGENDA ITEM 12:

MISCELLANEOUS ADMINISTRATIVE MATTERS

B. Proposed E-Verify Memorandum of Understanding

MANAGER'S COMMENTS:

The 2011 General Assembly enacted legislation (S.L. 2011-263 (H 36) enacting new NCGS 153A-99.1 and G.S. 160A-169.1) requiring counties, municipalities and businesses that employ 25 or more workers to use the federal E-Verify program to verify the work authorization of new hires. Counties and municipalities are required to register and participate in the federal E-Verify program to verify the work authorization of new hires, effective no later than October 1, 2011.

E-Verify is a web-based system operated by the Department of Homeland Security (DHS) in partnership with the Social Security Administration (SSA) and is provided to employers free of charge. In order to utilize the E-Verify program, the County must enter into a Memorandum of Understanding with the DHS and SSA.

Staff requests the Board authorize entering into a Memorandum of Understanding with the DHS and SSA. Board action is required.

Blank Page

Company ID Number: _____

THE E-VERIFY PROGRAM FOR EMPLOYMENT VERIFICATION MEMORANDUM OF UNDERSTANDING

ARTICLE I

PURPOSE AND AUTHORITY

This Memorandum of Understanding (MOU) sets forth the points of agreement between the Department of Homeland Security (DHS) and _____ _____(Employer) regarding the Employer's participation in the Employment Eligibility Verification Program (E-Verify). This MOU explains certain features of the E-Verify program and enumerates specific responsibilities of DHS, the Social Security Administration (SSA), and the Employer. E-Verify is a program that electronically confirms an employee's eligibility to work in the United States after completion of the Employment Eligibility Verification Form (Form I-9). For covered government contractors, E-Verify is used to verify the employment eligibility of all newly hired employees and all existing employees assigned to Federal contracts or to verify the entire workforce if the contractor so chooses.

Authority for the E-Verify program is found in Title IV, Subtitle A, of the Illegal Immigration Reform and Immigrant Responsibility Act of 1996 (IIRIRA), Pub. L. 104-208, 110 Stat. 3009, as amended (8 U.S.C. § 1324a note). Authority for use of the E-Verify program by Federal contractors and subcontractors covered by the terms of Subpart 22.18, "Employment Eligibility Verification", of the Federal Acquisition Regulation (FAR) (hereinafter referred to in this MOU as a "Federal contractor with the FAR E-Verify clause") to verify the employment eligibility of certain employees working on Federal contracts is also found in Subpart 22.18 and in Executive Order 12989, as amended.

ARTICLE II

FUNCTIONS TO BE PERFORMED

A. RESPONSIBILITIES OF SSA

1. SSA agrees to provide the Employer with available information that allows the Employer to confirm the accuracy of Social Security Numbers provided by all employees verified under this MOU and the employment authorization of U.S. citizens.

2. SSA agrees to provide to the Employer appropriate assistance with operational problems that may arise during the Employer's participation in the E-Verify program. SSA agrees to provide the Employer with names, titles, addresses, and telephone numbers of SSA representatives to be contacted during the E-Verify process.

3. SSA agrees to safeguard the information provided by the Employer through the E-Verify program procedures, and to limit access to such information, as is appropriate by law, to individuals responsible for the verification of Social Security Numbers and for evaluation of the E-Verify program or such other persons or entities who may be authorized by SSA as governed by the Privacy Act (5 U.S.C. § 552a), the Social Security Act (42 U.S.C. 1306(a)), and SSA regulations (20 CFR Part 401).

Company ID Number: _____

4. SSA agrees to provide a means of automated verification that is designed (in conjunction with DHS's automated system if necessary) to provide confirmation or tentative nonconfirmation of U.S. citizens' employment eligibility within 3 Federal Government work days of the initial inquiry.

5. SSA agrees to provide a means of secondary verification (including updating SSA records as may be necessary) for employees who contest SSA tentative nonconfirmations that is designed to provide final confirmation or nonconfirmation of U.S. citizens' employment eligibility and accuracy of SSA records for both citizens and non-citizens within 10 Federal Government work days of the date of referral to SSA, unless SSA determines that more than 10 days may be necessary. In such cases, SSA will provide additional verification instructions.

B. RESPONSIBILITIES OF DHS

1. After SSA verifies the accuracy of SSA records for employees through E-Verify, DHS agrees to provide the Employer access to selected data from DHS's database to enable the Employer to conduct, to the extent authorized by this MOU:

- Automated verification checks on employees by electronic means, and
- Photo verification checks (when available) on employees.

2. DHS agrees to provide to the Employer appropriate assistance with operational problems that may arise during the Employer's participation in the E-Verify program. DHS agrees to provide the Employer names, titles, addresses, and telephone numbers of DHS representatives to be contacted during the E-Verify process.

3. DHS agrees to make available to the Employer at the E-Verify Web site and on the E-Verify Web browser, instructional materials on E-Verify policies, procedures and requirements for both SSA and DHS, including restrictions on the use of E-Verify. DHS agrees to provide training materials on E-Verify.

4. DHS agrees to provide to the Employer a notice, which indicates the Employer's participation in the E-Verify program. DHS also agrees to provide to the Employer anti-discrimination notices issued by the Office of Special Counsel for Immigration-Related Unfair Employment Practices (OSC), Civil Rights Division, U.S. Department of Justice.

5. DHS agrees to issue the Employer a user identification number and password that permits the Employer to verify information provided by employees with DHS's database.

6. DHS agrees to safeguard the information provided to DHS by the Employer, and to limit access to such information to individuals responsible for the verification of employees' employment eligibility and for evaluation of the E-Verify program, or to such other persons or entities as may be authorized by applicable law. Information will be used only to verify the accuracy of Social Security Numbers and employment eligibility, to enforce the Immigration and Nationality Act (INA) and Federal criminal laws, and to administer Federal contracting requirements.

Company ID Number: _____

7. DHS agrees to provide a means of automated verification that is designed (in conjunction with SSA verification procedures) to provide confirmation or tentative nonconfirmation of employees' employment eligibility within 3 Federal Government work days of the initial inquiry.

8. DHS agrees to provide a means of secondary verification (including updating DHS records as may be necessary) for employees who contest DHS tentative nonconfirmations and photo non-match tentative nonconfirmations that is designed to provide final confirmation or nonconfirmation of the employees' employment eligibility within 10 Federal Government work days of the date of referral to DHS, unless DHS determines that more than 10 days may be necessary. In such cases, DHS will provide additional verification instructions.

C. RESPONSIBILITIES OF THE EMPLOYER

1. The Employer agrees to display the notices supplied by DHS in a prominent place that is clearly visible to prospective employees and all employees who are to be verified through the system.

2. The Employer agrees to provide to the SSA and DHS the names, titles, addresses, and telephone numbers of the Employer representatives to be contacted regarding E-Verify.

3. The Employer agrees to become familiar with and comply with the most recent version of the E-Verify User Manual.

4. The Employer agrees that any Employer Representative who will perform employment verification queries will complete the E-Verify Tutorial before that individual initiates any queries.

A. The Employer agrees that all Employer representatives will take the refresher tutorials initiated by the E-Verify program as a condition of continued use of E-Verify.

B. Failure to complete a refresher tutorial will prevent the Employer from continued use of the program.

5. The Employer agrees to comply with current Form I-9 procedures, with two exceptions:

• If an employee presents a "List B" identity document, the Employer agrees to only accept "List B" documents that contain a photo. (List B documents identified in 8 C.F.R. § 274a.2(b)(1)(B)) can be presented during the Form I-9 process to establish identity.) If an employee objects to the photo requirement for religious reasons, the Employer should contact E-Verify at 888-464-4218.

• If an employee presents a DHS Form I-551 (Permanent Resident Card) or Form I-766 (Employment Authorization Document) to complete the Form I-9, the Employer agrees to make a photocopy of the document and to retain the photocopy with the employee's Form I-9. The photocopy must be of sufficient quality to allow for verification of the photo and written information. The employer will use the photocopy to verify the photo and to assist DHS with its review of

photo non-matches that are contested by employees. Note that employees retain the right to present any List A, or List B and List C, documentation to complete the Form I-9. DHS may in the future designate other documents that activate the photo screening tool.

6. The Employer understands that participation in E-Verify does not exempt the Employer from the responsibility to complete, retain, and make available for inspection Forms I-9 that relate to its employees, or from other requirements of applicable regulations or laws, including the obligation to comply with the antidiscrimination requirements of section 274B of the INA with respect to Form I-9 procedures, except for the following modified requirements applicable by reason of the Employer's participation in E-Verify: (1) identity documents must have photos, as described in paragraph 5 above; (2) a rebuttable presumption is established that the Employer has not violated section 274A(a)(1)(A) of the Immigration and Nationality Act (INA) with respect to the hiring of any individual if it obtains confirmation of the identity and employment eligibility of the individual in good faith compliance with the terms and conditions of E-Verify; (3) the Employer must notify DHS if it continues to employ any employee after receiving a final nonconfirmation, and is subject to a civil money penalty between $550 and $1,100 for each failure to notify DHS of continued employment following a final nonconfirmation; (4) the Employer is subject to a rebuttable presumption that it has knowingly employed an unauthorized alien in violation of section 274A(a)(1)(A) if the Employer continues to employ an employee after receiving a final nonconfirmation; and (5) no person or entity participating in E-Verify is civilly or criminally liable under any law for any action taken in good faith based on information provided through the confirmation system. DHS reserves the right to conduct Form I-9 and E-Verify system compliance inspections during the course of E-Verify, as well as to conduct any other enforcement activity authorized by law.

7. The Employer agrees to initiate E-Verify verification procedures for new employees within 3 Employer business days after each employee has been hired (but after the Form I-9 has been completed), and to complete as many (but only as many) steps of the E-Verify process as are necessary according to the E-Verify User Manual, or in the case of Federal contractors with the FAR E-Verify clause, the E-Verify User Manual for Federal Contractors. The Employer is prohibited from initiating verification procedures before the employee has been hired and the Form I-9 completed. If the automated system to be queried is temporarily unavailable, the 3-day time period is extended until it is again operational in order to accommodate the Employer's attempting, in good faith, to make inquiries during the period of unavailability. Employers may initiate verification by notating the Form I-9 in circumstances where the employee has applied for a Social Security Number (SSN) from the SSA and is waiting to receive the SSN, provided that the Employer performs an E-Verify employment verification query using the employee's SSN as soon as the SSN becomes available.

8. The Employer agrees not to use E-Verify procedures for pre-employment screening of job applicants, in support of any unlawful employment practice, or for any other use not authorized by this MOU. Employers must use E-Verify for all new employees, unless an Employer is a Federal contractor that qualifies for the exceptions described in Article II.D.1.c. Except as provided in Article II.D, the Employer will not verify selectively and will not verify employees hired before the effective date of this MOU. The Employer understands that if the Employer uses the E-Verify system for any purpose other than as

authorized by this MOU, the Employer may be subject to appropriate legal action and termination of its access to SSA and DHS information pursuant to this MOU.

9. The Employer agrees to follow appropriate procedures (see Article III. below) regarding tentative nonconfirmations, including notifying employees in private of the finding and providing them written notice of the findings, providing written referral instructions to employees, allowing employees to contest the finding, and not taking adverse action against employees if they choose to contest the finding. Further, when employees contest a tentative nonconfirmation based upon a photo non-match, the Employer is required to take affirmative steps (see Article III.B. below) to contact DHS with information necessary to resolve the challenge.

10. The Employer agrees not to take any adverse action against an employee based upon the employee's perceived employment eligibility status while SSA or DHS is processing the verification request unless the Employer obtains knowledge (as defined in 8 C.F.R. § 274a.1(l)) that the employee is not work authorized. The Employer understands that an initial inability of the SSA or DHS automated verification system to verify work authorization, a tentative nonconfirmation, a case in continuance (indicating the need for additional time for the government to resolve a case), or the finding of a photo non-match, does not establish, and should not be interpreted as evidence, that the employee is not work authorized. In any of the cases listed above, the employee must be provided a full and fair opportunity to contest the finding, and if he or she does so, the employee may not be terminated or suffer any adverse employment consequences based upon the employee's perceived employment eligibility status (including denying, reducing, or extending work hours, delaying or preventing training, requiring an employee to work in poorer conditions, refusing to assign the employee to a Federal contract or other assignment, or otherwise subjecting an employee to any assumption that he or she is unauthorized to work) until and unless secondary verification by SSA or DHS has been completed and a final nonconfirmation has been issued. If the employee does not choose to contest a tentative nonconfirmation or a photo non-match or if a secondary verification is completed and a final nonconfirmation is issued, then the Employer can find the employee is not work authorized and terminate the employee's employment. Employers or employees with questions about a final nonconfirmation may call E-Verify at 1-888-464-4218 or OSC at 1-800-255-8155 or 1-800-237-2515 (TDD).

11. The Employer agrees to comply with Title VII of the Civil Rights Act of 1964 and section 274B of the INA, as applicable, by not discriminating unlawfully against any individual in hiring, firing, or recruitment or referral practices because of his or her national origin or, in the case of a protected individual as defined in section 274B(a)(3) of the INA, because of his or her citizenship status. The Employer understands that such illegal practices can include selective verification or use of E-Verify except as provided in part D below, or discharging or refusing to hire employees because they appear or sound "foreign" or have received tentative nonconfirmations. The Employer further understands that any violation of the unfair immigration-related employment practices provisions in section 274B of the INA could subject the Employer to civil penalties, back pay awards, and other sanctions, and violations of Title VII could subject the Employer to back pay awards, compensatory and punitive damages. Violations of either section 274B of the INA or Title VII may also lead to the termination of its participation in E-Verify. If the Employer has any questions relating to the anti-discrimination provision, it should contact OSC at 1-800-255-8155 or 1-800-237-2515 (TDD).

Company ID Number: _____

12. The Employer agrees to record the case verification number on the employee's Form I-9 or to print the screen containing the case verification number and attach it to the employee's Form I-9.

13. The Employer agrees that it will use the information it receives from SSA or DHS pursuant to E-Verify and this MOU only to confirm the employment eligibility of employees as authorized by this MOU. The Employer agrees that it will safeguard this information, and means of access to it (such as PINS and passwords) to ensure that it is not used for any other purpose and as necessary to protect its confidentiality, including ensuring that it is not disseminated to any person other than employees of the Employer who are authorized to perform the Employer's responsibilities under this MOU, except for such dissemination as may be authorized in advance by SSA or DHS for legitimate purposes.

14. The Employer acknowledges that the information which it receives from SSA is governed by the Privacy Act (5 U.S.C. § 552a(i)(1) and (3)) and the Social Security Act (42 U.S.C. 1306(a)), and that any person who obtains this information under false pretenses or uses it for any purpose other than as provided for in this MOU may be subject to criminal penalties.

15. The Employer agrees to cooperate with DHS and SSA in their compliance monitoring and evaluation of E-Verify, including by permitting DHS and SSA, upon reasonable notice, to review Forms I-9 and other employment records and to interview it and its employees regarding the Employer's use of E-Verify, and to respond in a timely and accurate manner to DHS requests for information relating to their participation in E-Verify.

D. RESPONSIBILITIES OF FEDERAL CONTRACTORS WITH THE FAR E-VERIFY CLAUSE

1. The Employer understands that if it is a subject to the employment verification terms in Subpart 22.18 of the FAR, it must verify the employment eligibility of any existing employee assigned to the contract and all new hires, as discussed in the Supplemental Guide for Federal Contractors. Once an employee has been verified through E-Verify by the Employer, the Employer may not reverify the employee through E-Verify.

a. Federal contractors with the FAR E-Verify clause agree to become familiar with and comply with the most recent versions of the E-Verify User Manual for Federal Contractors and the E-Verify Supplemental Guide for Federal Contractors.

b. Federal contractors with the FAR E-Verify clause agree to complete a tutorial for Federal contractors with the FAR E-Verify clause.

c. Federal contractors with the FAR E-Verify clause not enrolled at the time of contract award: An Employer that is not enrolled in E-Verify at the time of a contract award must enroll as a Federal contractor with the FAR E-Verify clause in E-Verify within 30 calendar days of contract award and, within 90 days of enrollment, begin to use E-Verify to initiate verification of employment eligibility of new hires of the Employer who are working in the United States, whether or not assigned to the contract. Once the Employer begins verifying new hires, such verification of new hires must be initiated

within 3 business days after the date of hire. Once enrolled in E-Verify as a Federal contractor with the FAR E-Verify clause, the Employer must initiate verification of employees assigned to the contract within 90 calendar days from the time of enrollment in the system and after the date and selecting which employees will be verified in E-Verify or within 30 days of an employee's assignment to the contract, whichever date is later.

d. Employers that are already enrolled in E-Verify at the time of a contract award but are not enrolled in the system as a Federal contractor with the FAR E-Verify clause: Employers enrolled in E-Verify for 90 days or more at the time of a contract award must use E-Verify to initiate verification of employment eligibility for new hires of the Employer who are working in the United States, whether or not assigned to the contract, within 3 business days after the date of hire. Employers enrolled in E-Verify as other than a Federal contractor with the FAR E-Verify clause, must update E-Verify to indicate that they are a Federal contractor with the FAR E-Verify clause within 30 days after assignment to the contract. If the Employer is enrolled in E-Verify for 90 calendar days or less at the time of contract award, the Employer must, within 90 days of enrollment, begin to use E-Verify to initiate verification of new hires of the contractor who are working in the United States, whether or not assigned to the contract. Such verification of new hires must be initiated within 3 business days after the date of hire. An Employer enrolled as a Federal contractor with the FAR E-Verify clause in E-Verify must initiate verification of each employee assigned to the contract within 90 calendar days after date of contract award or within 30 days after assignment to the contract, whichever is later.

e. Institutions of higher education, State, local and tribal governments and sureties: Federal contractors with the FAR E-Verify clause that are institutions of higher education (as defined at 20 U.S.C. 1001(a)), State or local governments, governments of Federally recognized Indian tribes, or sureties performing under a takeover agreement entered into with a Federal agency pursuant to a performance bond may choose to only verify new and existing employees assigned to the Federal contract. Such Federal contractors with the FAR E-Verify clause may, however, elect to verify all new hires, and/or all existing employees hired after November 6, 1986. The provisions of Article II.D, paragraphs 1.a and 1.b of this MOU providing timeframes for initiating employment verification of employees assigned to a contract apply to such institutions of higher education, State, local and tribal governments, and sureties.

f. Verification of all employees: Upon enrollment, Employers who are Federal contractors with the FAR E-Verify clause may elect to verify employment eligibility of all existing employees working in the United States who were hired after November 6, 1986, instead of verifying only new employees and those existing employees assigned to a covered Federal contract. After enrollment, Employers must elect to do so only in the manner designated by DHS and initiate E-Verify verification of all existing employees within 180 days after the election.

g. Form I-9 procedures for existing employees of Federal contractors with the FAR E-Verify clause: Federal contractors with the FAR E-Verify clause may choose to complete new Forms I-9 for all existing employees other than those that are completely exempt from this process. Federal contractors with the FAR E-Verify clause may also update previously completed Forms I-9 to initiate E-Verify verification of existing employees who are not completely exempt as long as that Form I-9 is complete (including the SSN), complies with Article II.C.5, the employee's work authorization has

not expired, and the Employer has reviewed the information reflected in the Form I-9 either in person or in communications with the employee to ensure that the employee's stated basis in section 1 of the Form I-9 for work authorization has not changed (including, but not limited to, a lawful permanent resident alien having become a naturalized U.S. citizen). If the Employer is unable to determine that the Form I-9 complies with Article II.C.5, if the employee's basis for work authorization as attested in section 1 has expired or changed, or if the Form I-9 contains no SSN or is otherwise incomplete, the Employer shall complete a new I-9 consistent with Article II.C.5, or update the previous I-9 to provide the necessary information. If section 1 of the Form I-9 is otherwise valid and up-to-date and the form otherwise complies with Article II.C.5, but reflects documentation (such as a U.S. passport or Form I-551) that expired subsequent to completion of the Form I-9, the Employer shall not require the production of additional documentation, or use the photo screening tool described in Article II.C.5, subject to any additional or superseding instructions that may be provided on this subject in the Supplemental Guide for Federal Contractors. Nothing in this section shall be construed to require a second verification using E-Verify of any assigned employee who has previously been verified as a newly hired employee under this MOU, or to authorize verification of any existing employee by any Employer that is not a Federal contractor with the FAR E-Verify clause.

2. The Employer understands that if it is a Federal contractor with the FAR E-Verify clause, its compliance with this MOU is a performance requirement under the terms of the Federal contract or subcontract, and the Employer consents to the release of information relating to compliance with its verification responsibilities under this MOU to contracting officers or other officials authorized to review the Employer's compliance with Federal contracting requirements.

ARTICLE III

REFERRAL OF INDIVIDUALS TO SSA AND DHS

A. REFERRAL TO SSA

1. If the Employer receives a tentative nonconfirmation issued by SSA, the Employer must print the notice as directed by the E-Verify system and provide it to the employee so that the employee may determine whether he or she will contest the tentative nonconfirmation. The Employer must review the tentative nonconfirmation with the employee in private.

2. The Employer will refer employees to SSA field offices only as directed by the automated system based on a tentative nonconfirmation, and only after the Employer records the case verification number, reviews the input to detect any transaction errors, and determines that the employee contests the tentative nonconfirmation. The Employer will transmit the Social Security Number to SSA for verification again if this review indicates a need to do so. The Employer will determine whether the employee contests the tentative nonconfirmation as soon as possible after the Employer receives it.

3. If the employee contests an SSA tentative nonconfirmation, the Employer will provide the employee with a system-generated referral letter and instruct the employee to visit an SSA office within 8 Federal Government work days. SSA will electronically transmit the result of the referral to the Employer within 10 Federal Government work days of the

referral unless it determines that more than 10 days is necessary. The Employer agrees to check the E-Verify system regularly for case updates.

4. The Employer agrees not to ask the employee to obtain a printout from the Social Security Number database (the Numident) or other written verification of the Social Security Number from the SSA.

B. REFERRAL TO DHS

1. If the Employer receives a tentative nonconfirmation issued by DHS, the Employer must print the tentative nonconfirmation notice as directed by the E-Verify system and provide it to the employee so that the employee may determine whether he or she will contest the tentative nonconfirmation. The Employer must review the tentative nonconfirmation with the employee in private.

2. If the Employer finds a photo non-match for an employee who provides a document for which the automated system has transmitted a photo, the employer must print the photo non-match tentative nonconfirmation notice as directed by the automated system and provide it to the employee so that the employee may determine whether he or she will contest the finding. The Employer must review the tentative nonconfirmation with the employee in private.

3. The Employer agrees to refer individuals to DHS only when the employee chooses to contest a tentative nonconfirmation received from DHS automated verification process or when the Employer issues a tentative nonconfirmation based upon a photo non-match. The Employer will determine whether the employee contests the tentative nonconfirmation as soon as possible after the Employer receives it.

4. If the employee contests a tentative nonconfirmation issued by DHS, the Employer will provide the employee with a referral letter and instruct the employee to contact DHS through its toll-free hotline (as found on the referral letter) within 8 Federal Government work days.

5. If the employee contests a tentative nonconfirmation based upon a photo non-match, the Employer will provide the employee with a referral letter to DHS. DHS will electronically transmit the result of the referral to the Employer within 10 Federal Government work days of the referral unless it determines that more than 10 days is necessary. The Employer agrees to check the E-Verify system regularly for case updates.

6. The Employer agrees that if an employee contests a tentative nonconfirmation based upon a photo non-match, the Employer will send a copy of the employee's Form I-551 or Form I-766 to DHS for review by:

- Scanning and uploading the document, or
- Sending a photocopy of the document by an express mail account (paid for at employer expense).

7. If the Employer determines that there is a photo non-match when comparing the photocopied List B document described in Article II.C.5 with the image generated in E-Verify, the Employer must forward the employee's documentation to DHS using one of the means described in the preceding paragraph, and allow DHS to resolve the case.

Company ID Number: _____

ARTICLE IV

SERVICE PROVISIONS

SSA and DHS will not charge the Employer for verification services performed under this MOU. The Employer is responsible for providing equipment needed to make inquiries. To access E-Verify, an Employer will need a personal computer with Internet access.

ARTICLE V

PARTIES

A. This MOU is effective upon the signature of all parties, and shall continue in effect for as long as the SSA and DHS conduct the E-Verify program unless modified in writing by the mutual consent of all parties, or terminated by any party upon 30 days prior written notice to the others. Any and all system enhancements to the E-Verify program by DHS or SSA, including but not limited to the E-Verify checking against additional data sources and instituting new verification procedures, will be covered under this MOU and will not cause the need for a supplemental MOU that outlines these changes. DHS agrees to train employers on all changes made to E-Verify through the use of mandatory refresher tutorials and updates to the E-Verify User Manual, the E-Verify User Manual for Federal Contractors or the E-Verify Supplemental Guide for Federal Contractors. Even without changes to E-Verify, DHS reserves the right to require employers to take mandatory refresher tutorials. An Employer that is a Federal contractor with the FAR E-Verify clause may terminate this MOU when the Federal contract that requires its participation in E-Verify is terminated or completed. In such a circumstance, the Federal contractor with the FAR E-Verify clause must provide written notice to DHS. If an Employer that is a Federal contractor with the FAR E-Verify clause fails to provide such notice, that Employer will remain a participant in the E-Verify program, will remain bound by the terms of this MOU that apply to participants that are not Federal contractors with the FAR E-Verify clause, and will be required to use the E-Verify procedures to verify the employment eligibility of all newly hired employees.

B. Notwithstanding Article V, part A of this MOU, DHS may terminate this MOU if deemed necessary because of the requirements of law or policy, or upon a determination by SSA or DHS that there has been a breach of system integrity or security by the Employer, or a failure on the part of the Employer to comply with established procedures or legal requirements. The Employer understands that if it is a Federal contractor with the FAR E-Verify clause, termination of this MOU by any party for any reason may negatively affect its performance of its contractual responsibilities.

C. Some or all SSA and DHS responsibilities under this MOU may be performed by contractor(s), and SSA and DHS may adjust verification responsibilities between each other as they may determine necessary. By separate agreement with DHS, SSA has agreed to perform its responsibilities as described in this MOU.

D. Nothing in this MOU is intended, or should be construed, to create any right or benefit, substantive or procedural, enforceable at law by any third party against the United States, its agencies, officers, or employees, or against the Employer, its agents, officers, or employees.

Company ID Number: _____

E. Each party shall be solely responsible for defending any claim or action against it arising out of or related to E-Verify or this MOU, whether civil or criminal, and for any liability wherefrom, including (but not limited to) any dispute between the Employer and any other person or entity regarding the applicability of Section 403(d) of IIRIRA to any action taken or allegedly taken by the Employer.

F. The Employer understands that the fact of its participation in E-Verify is not confidential information and may be disclosed as authorized or required by law and DHS or SSA policy, including but not limited to, Congressional oversight, E-Verify publicity and media inquiries, determinations of compliance with Federal contractual requirements, and responses to inquiries under the Freedom of Information Act (FOIA).

G. The foregoing constitutes the full agreement on this subject between DHS and the Employer.

H. The individuals whose signatures appear below represent that they are authorized to enter into this MOU on behalf of the Employer and DHS respectively.

To be accepted as a participant in E-Verify, you should only sign the Employer's Section of the signature page. If you have any questions, contact E-Verify at 888-464-4218.

Employer		
Name (Please Type or Print)		Title
Signature		Date
Department of Homeland Security – Verification Division		
Name (Please Type or Print)		Title
Signature		Date

Company ID Number: _____

Information Required for the E-Verify Program	
Information relating to your Company:	
Company Name:	
Company Facility Address:	
Company Alternate Address:	
County or Parish:	
Employer Identification Number:	
North American Industry Classification Systems Code:	
Administrator:	
Number of Employees:	
Number of Sites Verified for:	

Are you verifying for more than 1 site? If yes, please provide the number of sites verified for in each State:

State	Number of sites	Site(s)

Company ID Number: _____

Information relating to the Program Administrator(s) for your Company on policy questions or operational problems:	
Name:	
Telephone Number:	
Fax Number:	
E-mail Address:	

Information relating to the Program Administrator(s) for your Company on policy questions or operational problems:	
Name:	
Telephone Number:	
Fax Number:	
E-mail Address:	

Blank Page

AGENDA ITEM 12:

MISCELLANEOUS ADMINISTRATIVE MATTERS

C. Proposed "Moment of Remembrance" Commemorating September 11, 2001

MANAGER'S COMMENTS:

The Honorable Frank R. Lautenberg of New Jersey requests the County participate in "The Moment of Remembrance" for the victims of September 11, 2001. The Moment of Remembrance will take place for one full minute at 1:00 PM Eastern Time on September 11, 2011, in which cities and towns, firehouses churches and other institutions are asked to sound sirens and ring bells during the minute.

Should the Board direct, staff could place a notice of "The Moment of Remembrance" on the County website and public entrances. In addition, a memo may be sent to County Departments to notify them of the time of the event.

Staff seeks direction from the Board.

Blank Page

FRANK R. LAUTENBERG
NEW JERSEY

COMMITTEES:
APPROPRIATIONS
COMMERCE, SCIENCE, AND TRANSPORTATION
ENVIRONMENT AND PUBLIC WORKS

United States Senate

WASHINGTON, DC 20510

August 9, 2011

Dear County Official:

This year we mark the 10th anniversary of the terrorist attacks of September 11, 2001, a day that changed America forever. To commemorate this occasion and pay tribute to those we lost, I introduced the enclosed resolution establishing a national Moment of Remembrance at 1:00 p.m. Eastern Daylight Time on September 11, 2011. In an overwhelming demonstration of unity, the Senate unanimously passed the resolution with the cosponsorship of all 100 United States Senators. I write to request that you join us in making this Moment of Remembrance a symbol of solidarity throughout your county and across the country.

During the Moment of Remembrance, every person across the country is called upon to ***stop and remember*** those we lost in the September 11th attacks. The Moment of Remembrance will take place for one full minute at 1:00 p.m. Eastern Time on September 11, 2011, and cities and towns, firehouses, churches and other institutions across the country are called upon to sound sirens and ring bells during that minute. These sirens and bells will be a signal for each person to stop and remember the people we lost and demonstrate the perseverance the American people have shown since that fateful day.

I hope you will participate by:

- Working with and contacting firehouses, police, churches, and other institutions in your municipality to sound sirens and ring bells for one minute at 1:00 p.m.;
- Passing a resolution or issuing a proclamation recognizing the Moment of Remembrance;
- Hosting an event to commemorate the 10th anniversary of the September 11th attacks that includes the Moment of Remembrance; and
- Notifying your constituents of the forthcoming Moment of Remembrance by noting it on your website and through local papers, social media and other outreach mechanisms.

I have created a website for the Moment of Remembrance where you can get more information: www.lautenberg.senate.gov/stopandremember. You can also contact my office at stopandremember@lautenberg.senate.gov or 202-224-3224 for additional information.

Thank you for your consideration.

Sincerely,

Frank R. Lautenberg

ONE GATEWAY CENTER, 23RD FLOOR
NEWARK, NJ 07102
(973) 639-8700 FAX: (973) 639-8723

HART SENATE OFFICE BUILDING, SUITE 324
WASHINGTON, DC 20510
(202) 224-3224 FAX: (202) 228-4054

2 RIVERSIDE DRIVE
ONE POINT CENTER, SUITE 505
CAMDEN, NJ 08101
(856) 338-8922 FAX: (856) 338-8936

112th CONGRESS
1st Session

S.RES.237

Expressing the sense of the Senate regarding coming together as a Nation and ceasing all work or other activity for a moment of remembrance beginning at 1:00 PM Eastern Daylight Time on September 11, 2011, in honor of the 10th anniversary of the terrorist attacks committed against the United States on September 11, 2001.

IN THE SENATE OF THE UNITED STATES

July 22, 2011

Mr. LAUTENBERG (for himself, Mr. TOOMEY, Mr. MENENDEZ, Mr. SCHUMER, Mrs. GILLIBRAND, Mr. CASEY, Mr. LIEBERMAN, Mr. BLUMENTHAL, Mr. WEBB, Mr. WARNER, Mr. REID, Mr. MCCONNELL, Mr. AKAKA, Mr. ALEXANDER, Ms. AYOTTE, Mr. BARRASSO, Mr. BAUCUS, Mr. BEGICH, Mr. BENNET, Mr. BINGAMAN, Mr. BLUNT, Mr. BOOZMAN, Mrs. BOXER, Mr. BROWN of Massachusetts, Mr. BROWN of Ohio, Mr. BURR, Ms. CANTWELL, Mr. CARDIN, Mr. CARPER, Mr. CHAMBLISS, Mr. COATS, Mr. COBURN, Mr. COCHRAN, Ms. COLLINS, Mr. CONRAD, Mr. COONS, Mr. CORKER, Mr. CORNYN, Mr. CRAPO, Mr. DEMINT, Mr. DURBIN, Mr. ENZI, Mrs. FEINSTEIN, Mr. FRANKEN, Mr. GRAHAM, Mr. GRASSLEY, Mrs. HAGAN, Mr. HARKIN, Mr. HATCH, Mr. HELLER, Mr. HOEVEN, Mrs. HUTCHISON, Mr. INHOFE, Mr. INOUYE, Mr. ISAKSON, Mr. JOHANNS, Mr. JOHNSON of Wisconsin, Mr. JOHNSON of South Dakota, Mr. KERRY, Mr. KIRK, Ms. KLOBUCHAR, Mr. KOHL, Mr. KYL, Ms. LANDRIEU, Mr. LEAHY, Mr. LEE, Mr. LEVIN, Mr. LUGAR, Mr. MANCHIN, Mr. MCCAIN, Mrs. MCCASKILL, Mr. MERKLEY, Ms. MIKULSKI, Mr. MORAN, Ms. MURKOWSKI, Mrs. MURRAY, Mr. NELSON of Nebraska, Mr. NELSON of Florida, Mr. PAUL, Mr. PORTMAN, Mr. PRYOR, Mr. REED, Mr. RISCH, Mr. ROBERTS, Mr. ROCKEFELLER, Mr. RUBIO, Mr. SANDERS, Mr. SESSIONS, Mrs. SHAHEEN, Mr. SHELBY, Ms. SNOWE, Ms. STABENOW, Mr. TESTER, Mr. THUNE, Mr. UDALL of Colorado, Mr. UDALL of New Mexico, Mr. VITTER, Mr. WHITEHOUSE, Mr. WICKER, and Mr. WYDEN) submitted the following resolution; which was considered and agreed to

S. RES. 237

Expressing the sense of the Senate regarding coming together as a Nation and ceasing all work or other activity for a moment of remembrance beginning at 1:00 PM Eastern Daylight Time on September 11, 2011, in honor of the 10th anniversary of the terrorist attacks committed against the United States on September 11, 2001.

Whereas at 8:46 AM, on September 11, 2001, hijacked American Airlines Flight 11 crashed into the upper portion of the North Tower of the World Trade Center in New York City, New York;

Whereas 17 minutes later, at 9:03 AM, hijacked United Airlines Flight 175 crashed into the South Tower of the World Trade Center;

Whereas at 9:37 AM, the west wall of the Pentagon was hit by hijacked American Airlines Flight 77, the impact of which caused immediate and catastrophic damage to the headquarters of the Department of Defense;

Whereas at approximately 10:00 AM, the passengers and crew of hijacked United Airlines Flight 93 acted heroically to retake control of the airplane and thwart the taking of additional American lives by crashing the airliner in Shanksville, Pennsylvania, and, in doing so, gave their lives to save countless others;

Whereas nearly 3,000 innocent civilians were killed in the heinous attacks of September 11, 2001;

Whereas tens of thousands of individuals narrowly escaped the attacks at the Pentagon and World Trade Center and, as witnesses to this tragedy, are forever changed;

Whereas countless fire departments, police departments, first responders, governmental officials, workers, emergency medical personnel, and volunteers responded immediately and heroically to those horrific events;

Whereas the Fire Department of New York suffered 343 fatalities on September 11, 2001, the largest loss of life of any emergency response agency in United States history;

Whereas the Port Authority Police Department suffered 37 fatalities in the attacks, the largest loss of life of any police force in United States history in a single day;

Whereas the New York Police Department suffered 23 fatalities as a result of the terrorist attacks;

Whereas the impact of that day on public health continues through 2011, as nearly 90,000 people are at risk of or suffering from negative health effects as a result of the events of September 11, 2001, including 14,000 workers and 2,400 community residents who are sick, and tens of thousands of others whose health is being monitored;

Whereas 10 years later, the people of the United States and people around the world continue to mourn the tremendous loss of innocent life on that fateful day;

Whereas 10 years later, thousands of men and women in the United States Armed Forces remain in harm's way defending the United States against those who seek to threaten the United States;

Whereas on the 10th anniversary of this tragic day, the thoughts of the people of the United States are with all of the victims of the events of September 11, 2001, and their families;

Whereas the lives of Americans were changed forever on September 11, 2001, when events threatened the American way of life;

Whereas in December 2001, Congress and the President joined together to designate September 11 as Patriot Day (Public Law 107-89);

Whereas in September 2002, and each September thereafter through September 2008, President Bush issued Proclamations 7590, 7702, 7812, 7929, 8047, 8174, and 8286 (67 Fed. Reg. 57125; 68 Fed. Reg. 53013; 69 Fed. Reg. 55717; 70 Fed. Reg. 54467; 71 Fed. Reg. 53959; 72 Fed. Reg. 51553; 73 Fed. Reg. 52773) proclaiming September 11 of that year, respectively, as Patriot Day;

Whereas in 2009, Congress and the President joined together to designate September 11 as a National Day of Service and Remembrance under the Serve America Act (Public Law 111-13; 123 Stat. 1460);

Whereas in September 2009 and 2010, President Obama issued Proclamation 8413 (74 Fed. Reg. 47045) and Proclamation 8559 (75 Fed. Reg. 56463) proclaiming September 11, 2009, and September 11, 2010, respectively, as Patriot Day and National Day of Service and Remembrance; and

Whereas September 11 will never, and should never, be just another day in the hearts and minds of all people of the United States: Now, therefore, be it

Resolved, That the Senate--

(1) recognizes September 11, 2011, as a day of solemn commemoration of the events of September 11, 2001, and a day to come together as a Nation;

(2) offers its deepest and most sincere condolences to the families, friends, and loved ones of the innocent victims of the September 11, 2001, terrorist attacks;

(3) honors the heroic service, actions, and sacrifices of first responders, law enforcement personnel, State and local officials, volunteers, and countless others who aided the innocent victims of those attacks and, in doing so, bravely risked and often gave their own lives;

(4) recognizes the valiant service, actions, and sacrifices of United States personnel, including members of the United States Armed Forces, the United States intelligence agencies, the United States diplomatic service, homeland security and law enforcement personnel, and their families, who have given so much, including their lives and well-being, to support the cause of freedom and defend the security of the United States;

(5) reaffirms that the people of the United States will never forget the challenges our country endured on and since September 11, 2001, and will work tirelessly to defeat those who attacked the United States; and

(6) on the 10th anniversary of this tragic day in United States history--

(A) calls upon all of the people and institutions of the United States to observe a moment of remembrance on September 11, 2011, including--

(i) media outlets;

(ii) houses of worship;

(iii) military organizations;

(iv) veterans organizations;

(v) airlines;

(vi) airports;

(vii) railroads;

(viii) sports teams;

(ix) the Federal Government;

(x) State and local governments;
(xi) police, fire, and other public institutions;
(xii) educational institutions;
(xiii) businesses; and
(xiv) other public and private institutions; and

(B) encourages the observance of the moment of remembrance or prayer to last for 1 minute beginning at 1:00 PM Eastern Daylight Time by, to the maximum extent practicable--

(i) ceasing all work or other activity; and
(ii) marking the moment in an appropriate manner, including by ringing bells, blowing whistles, or sounding sirens.

Blank Page

AGENDA ITEM 12:

MISCELLANEOUS ADMINISTRATIVE MATTERS

D. Announcements

MANAGER'S COMMENTS:

New Courthouse security measures will be implemented beginning Tuesday, September 6, 2011. The King Street entrance will be the only public access to the building.

The Downtown Boone Post Office is under consideration to be discontinued. A public meeting is scheduled at the Downtown Boone Post Office on Tuesday, September 6, 2011, from 3:00 to 4:00 P.M. A survey is included in your packet which may be filled out and mailed in or turned in at the public meeting or the Town of Boone.

Smoky Mountain Center invites you to attend an informational meeting entitled, "Medicaid Waiver 101" scheduled for Thursday, September 8, 2011, from 4:00 P.M. to 6:00 P.M. at the Smoky Mountain Center Administrative Office in Sylva. If you wish to attend, please inform Anita who will be glad to RSVP on your behalf.

The Opening Banquet for the 59th Annual North Carolina Association of Register of Deeds Conference is scheduled for Sunday, September 11, 2011, at 6:30 P.M.

A joint meeting with the Town of Boone is scheduled on Monday, September 12, 2011, at 5:00 P.M. in the Commissioners' Board Room. Topics of discussion will include: ETJ appointments, clarification of the water allocation for the old high school, centralized dispatching, and Greenway expansion.

Blue Ridge Electric Membership Corporation is holding a Community Leaders Council Meeting on Tuesday, September 20, 2011, at the Broyhill Inn and Conference Center at 6:00 P.M. The second regular meeting of the Board of Commissioners is scheduled for the same date beginning at 5:00 P.M.

The Watauga County Board of Commissioners and North Carolina Emergency Management have scheduled a training for public officials and staff detailing their roles in emergency management on Thursday, September 22, 2011, from 11:00 A.M. to 1:00 P.M. in the Commissioners' Board Room of the Watauga County Administration Building. Lunch will be provided.

Written comments addressing the proposed reclassification of the South Fork New River may be submitted until September 30, 2011, to Elizabeth Kountis with the North Carolina Department of Environment and Natural Resources – Division of Water Quality, Planning Section.

Blank Page

Announcements

Anita Fogle

From: Deron Geouque
Sent: Monday, August 29, 2011 10:33 AM
To: Anita Fogle
Subject: FW: Important Information Concerning Downtown Boone Post Office Closing
Attachments: Post Office Survey.pdf

BCC announcements 9-6-2011.

Deron Geouque
County Manager
Watauga County
814 West King Street
Boone, NC 28607
(P) 828-265-8000
(F) 828-264-3230
Deron.Geouque@watgov.org

From: DBDA Director [mailto:DBDA@boone-nc.org]
Sent: Monday, August 29, 2011 9:47 AM
To: dbda@boone-nc.org
Subject: FW: Important Information Concerning Downtown Boone Post Office Closing

From: DBDA Director [mailto:DBDA@boone-nc.org]
Sent: Friday, August 26, 2011 4:21 PM
To: 'DBDA Director'
Subject: Important Information Concerning Downtown Boone Post Office Closing

As many of you already know, the Downtown Boone Post Office is currently being evaluated to determine if it will be discontinued (the nice synonym for CLOSED). I have attached information along with a survey concerning usage of the facility. Please take the time to read the attached information, and fill out the survey. There will be a Public Meeting at the Downtown Station on September 6, 2011 from 3:00 – 4:00pm. PLEASE PLAN TO ATTEND THIS MEETING TO VOICE YOUR SUPPORT FOR THE DOWNTOWN POST OFFICE! You can mail in your survey before September 1st, drop your survey off at Town Hall, or bring your survey or comments with you to the public meeting on the 6th. Please pass this vital information on to your friends and neighbors.

Thank You

Director
Downtown Boone Development Association
Phone: 828/262-4532
ax: 828/265-9403

UNITED STATES POSTAL SERVICE

08/12/2011

Postal Customer
BOONE, NC 28607

This letter provides notice that the U.S. Postal Service is conducting a discontinuance feasibility study of facility operations at the Downtown Boone Station into the Boone Post Office.

The office is being studied due to declining office workload, which may indicate that maintaining this facility is not warranted. The revenue and/or the volume this office has been in a steady decline over the past several years..

A discontinuance feasibility study involves a review of delivery and retail operations of a postal facility. The purpose of the study is to evaluate the facility's operations in a continuing effort to meet customers' retail needs, improve productivity, increase efficiency, and cut costs.

Customer needs have changed dramatically. Many customers receive and pay their bills online and communicate by email and text message. In addition, many customers demand easier, more convenient access to Postal Service products and services when and where they want them – online, on their smart phones and at the stores they frequent.

If a decision is ultimately made to discontinue the Downtown Boone Station and you are a Post Office Box customer, you will have the option of Post Office Box delivery at the Boone Post Office, or you may receive carrier delivery at your residence. To request delivery, submit a request for establishment of rural delivery service, PS Form 4027, Petition for Change in Rural Delivery, is available at the Downtown Boone Station. The Boone Post Office has retail hours from 830 to 1700 Monday through Friday and 830 to 1200 on Saturday, which is 2.0 miles away.

Retail services would continue to be available through a variety of channels beyond traditional brick-and-mortar facilities, such as the www.usps.com website, stamp consignment locations , and Stamps by Mail, Fax, and Phone.

We value your opinions during this review process. As the Postal Manager responsible for all Post Offices in your area, I would like your input concerning your postal needs. We encourge you to complete and return the enclosed survey in the pre-addressed postage-paid envelope provided. Your responses along with others received, will be included in the study and considered carefully before any final determination regarding discontinuance is made. Please submit your response no later than 09/01/2011.

A community meeting will he held to explain the study findings and to address community concerns. Postal representatives will be at the Downtown Boone Station on 09/06/2011 from 3:00 pm to 4:00 pm to answer questions and provide information about our service. You may wish to discuss and submit your questionnaire at that time.

Written comments may be hand-delivered to the Downtown Boone Station or mailed to:

District Discontinuance Coordinator
GREENSBORO PFC
PO Box 27499
Greensboro NC, 27498-9900

The study consists of a publicly available record, so please be advised that any information or responses that you furnish will be visible to others.

A proposal that further explains the nature and justification of the proposed change in service and requests for customer comment may be posted prior to the community meeting. Comments received from the questionnaire, community meeting, and proposal will be considered prior to making a final determination.

If you have any questions concerning this discontinuance feasibility study, please contact Dawn Lambert, District Discontinuance Coordinator Contact at (336) 668-1289.

Sincerely,

Steve Hobbs
Manager, Post Office Operations

Enclosures:
Customer Survey/Pre-addressed postage-paid envelope
Summary of Postal Service Retail Facility Change Regulations

UNITED STATES POSTAL SERVICE

POST OFFICE ON WHEELS
SERVICES AVAILABLE FROM RURAL AND HIGHWAY CONTRACT ROUTE CARRIERS

You can eliminate almost all trips to the Post Office, because doing business with the Postal Service is as close as your mailbox. The carrier can provide virtually all postal services to you, and most transactions do not require meeting the carrier at the mailbox. Some of the most frequently used services are:

MAILING PACKAGES

Carriers will accept packages at the mailbox without a customer being present, provided the postage is fully prepaid, and the customer is known to reside or conduct business at that collection point. The package MUST have a matching return address that is the same as the collection point. If postage has not been applied, estimate the amount of postage needed and leave the money in the mailbox. If insurance is desired, the value of the contents must be specified. The carrier will take the package to the Post Office, and it will be weighed to determine the appropriate rate. The package will be mailed that same day. The carrier will leave the customer's change and insurance receipt, if appropriate, in the mailbox on the next delivery day.

PURCHASING STAMPS BY MAIL

The Stamps by Mail program provides customers the opportunity to purchase stamps, envelopes, and postal cards by using Form 3227-R, *Stamp Purchase Order (Rural)*, available from the Post Office or the carrier. Commemorative stamps and stamp-collecting products are also available. The customer addresses the postage paid order form envelope, encloses payment by personal check or postal money order made payable to the United States Postal Service, and mails the form (postage-free) or leaves it in the mailbox for the carrier to pick up. Most orders are processed overnight, and some immediately.

PURCHASING POSTAL MONEY ORDERS

Customers may purchase money orders by meeting the carrier at the mailbox, completing an application, and paying the carrier (in cash) the price of the money order, plus the fee. The carrier gives the customer a receipt for the application. The money order is completed when the carrier returns to the Post Office, and a money order receipt is left in the customer's mailbox on the next delivery day. Most customers provide the carrier with a stamped, self-addressed envelope in which the completed money order is mailed to its destination. If customers prefer, the completed money orders will be returned for verification on the next delivery day.

SPECIAL SERVICES

Special services such as Certified, Registered, Express Mail, Delivery Confirmation, Signature Confirmation, and COD may be obtained from the carrier by leaving a note in the mailbox, along with the appropriate payment. The carrier will provide the services that day and leave a customer receipt in the mailbox on the next delivery day.

HOLDING MAIL

Customers who will be away for an extended time, such as a vacation, may request that their mail be held at the Post Office during their absence. Upon return, the customer asks the Post Office to resume delivery.

UNITED STATES
POSTAL SERVICE

SUMMARY OF POST OFFICE CHANGE REGULATIONS

Certain regulations based on federal law apply when postal managers propose to replace a Post Office with an alternate form of postal service. These regulations are designed to ensure that the reasons for proposing such changes in postal service are fully disclosed at a stage when customers can make helpful contributions toward a final decision. The full text of the statutory provisions appears in Title 39, *United States Code*, Section 404(b), while the implementing regulations appear in Title 39, *Code of Federal Regulations*, Part 241.3.

According to implementing regulations, an initial investigation and any subsequent formal proposal to discontinue a Post Office originate with postal field managers responsible for Post Offices in that area. The proposal must explain the services recommended as substitutes and the rationale that supports this recommendation. The written proposal is prominently posted for 60 days at affected Post Offices, along with an "Invitation for Comments," which formally invites customer comments. At the end of the 60-day comment period, additional review is made at lower and upper levels of postal management.

When a final decision is made at Postal Headquarters in Washington, DC, that decision is posted in affected Post Offices for 30 days, during which customers may appeal the decision to the Postal Regulatory Commission in Washington, DC. The Postal Regulatory Commission has 120 days to consider and decide an appeal. Even without an appeal, no Post Office may be closed sooner than 60 days after the public posting of the final decision.

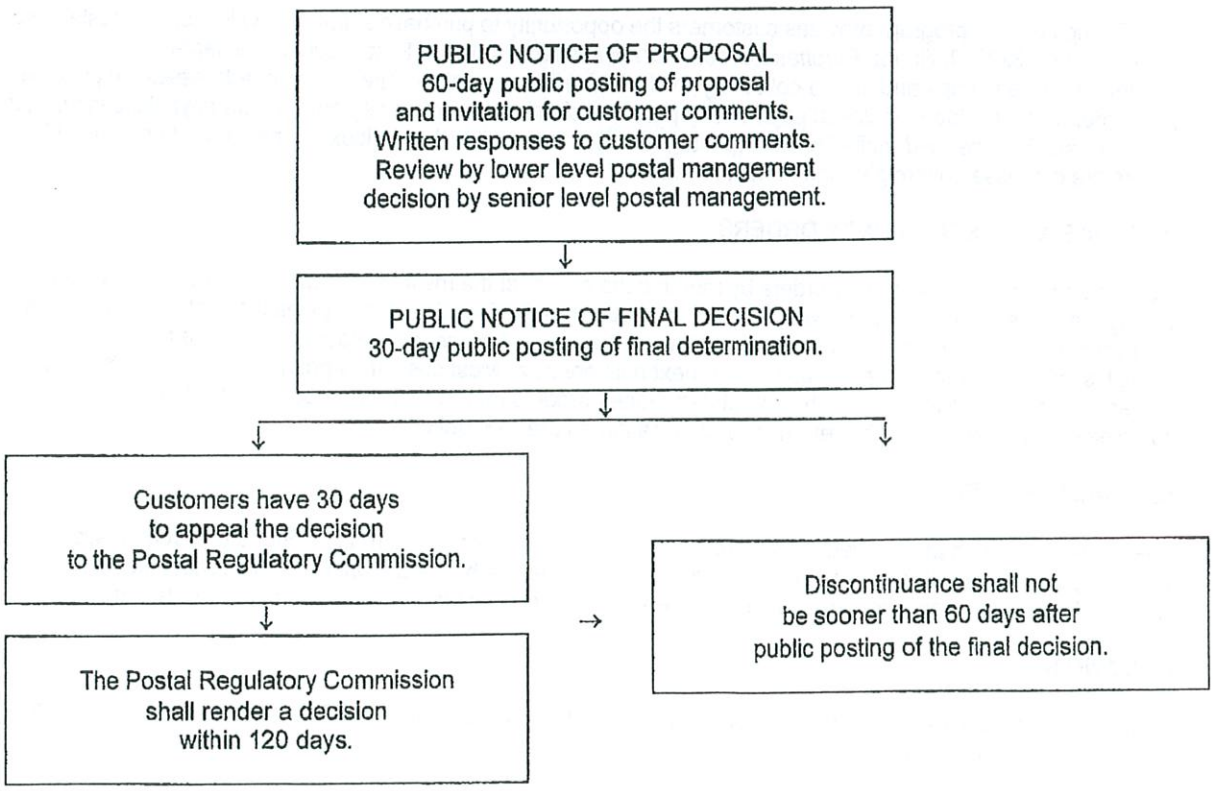

UNITED STATES POSTAL SERVICE®

Postal Service Customer Questionnaire

Your responses to the following questions are important to the US Postal Service and will be considered in the feasibility study for the Downtown Boone Station. Please take a few minutes to complete this survey and return it no later than 09/01/2011 in the postage-paid envelope provided.

The study consists of a publicly available record, so please be advised that any information that you furnish will be visible to others.

1. Do you visit the Downtown Boone Station for personal reasons, business-related reasons, or both?

☐ Personal reasons ☐ Business-related reasons ☐ Both

2. Please check the appropriate box to indicate whether you use the Downtown Boone Station for each of the following:

Postal Services	Daily	Weekly	Monthly	Never
a. Buying Stamps	☐	☐	☐	☐
b. Mailing Letters	☐	☐	☐	☐
c. Mailing Parcels	☐	☐	☐	☐
d. Pick up Post Office box mail	☐	☐	☐	☐
e. Pick up general delivery mail	☐	☐	☐	☐
f. Buying money orders	☐	☐	☐	☐
g. Obtaining special services, including Certified Mail, Registered Mail, Insured Mail, Delivery Confirmation, or Signature Confirmation	☐	☐	☐	☐
h. Sending Express Mail	☐	☐	☐	☐
i. Sending Priority Mail	☐	☐	☐	☐
j. Carrier pickup	☐	☐	☐	☐
k. Buying stamp-collecting material	☐	☐	☐	☐
l. Entering permit or bulk mailings	☐	☐	☐	☐
m. Obtaining other federal agency forms (e.g., Selective Service, Duck Stamps, Passport Applications)	☐	☐	☐	☐
n. School bus stop	☐	☐	☐	☐
o. Assisting senior citizens, persons with disabilities, etc.	☐	☐	☐	☐
p. Public bulletin board	☐	☐	☐	☐
q. Community gathering place	☐	☐	☐	☐
r. Other	☐	☐	☐	☐

3. Do you ever use any of the following alternative methods to conduct business with the Postal Service?

Post Office in vicinity of where you work or shop	☐ YES	☐ NO
usps.com website	☐ YES	☐ NO
Stamps by Mail	☐ YES	☐ NO
Stamps by Phone	☐ YES	☐ NO
Stamps Online	☐ YES	☐ NO
Click-N-Ship	☐ YES	☐ NO
Buy stamps or mail packages at grocery or other retail store	☐ YES	☐ NO

4. Do you currently use local businesses in the community?

   ☐ Yes ☐ No

5. If you answered "yes" in Question 4, would you continue to use these businesses if the Downtown Boone Station is discontinued?

   ☐ Yes ☐ No

6. Do you currently use businesses in nearby communities?

   ☐ Yes ☐ No

7. Do you have a means of transportation available to get to another Post Office in the vicinity?

   ☐ Yes ☐ No

8. How do you currently receive your mail?

   ☐ Carrier ☐ PO Box ☐ Other

Additional Comments:

Name: _____ Address: _____

Deron Geouque

From: Shelly Foreman [shelly@smokymountaincenter.com]
Sent: Thursday, August 04, 2011 12:33 PM
To: Paul Leek; Deron Geouque
Subject: Medicaid Waiver Expansion Celebration at SMC and upcoming local government official Medicaid Waiver training meetings
Attachments: August 25th SMC Celebration Event.pdf; letter of selection.pdf

Importance: High

Hello All:

SMC would like to invite you and your county Board of Commissioner members to a very special celebration of our selection in the Medicaid Waiver expansion initiative, and to recognize our staff and their hard work to accomplish this goal. **Secretary Lanier Cansler will be the keynote speaker at this event on Thursday, August 25th, starting at 12:30pm, at the SMC Administrative office in Sylva (see attached invitation).**

Smoky Mountain Center (SMC) has been chosen by the Department of Health and Human Services to participate in the State's Medicaid 1915 b/c Waiver Expansion Initiative. This means that your communities will become a part of this exciting initiative that will establish the public management of Medicaid funds for individuals with behavioral health and intellectual/ developmental disabilities through the SMC Local Management Entity for these services. With Health Care Reform, this is an important initiative for counties as a means to effectively manage and control Medicaid costs in a manner that still promotes a responsive and local approach to serving individuals with disabilities in our communities.

I ask that you share this with your county's commissioners as an opportunity to talk with local legislators, fellow commissioners and Secretary Cansler and other State representatives. Please let me know if you plan to attend.

I will also be sending you further information on regional "Medicaid Waiver 101" meetings so you and your county's commissioners can get additional information on the Medicaid Waiver and what this means for local counties and the mental health ,intellectual/ developmental disability and substance abuse service system.

Mark these Dates for these Informational Sessions:
Central Region- Tuesday, August 30th from 4:00pm-6:00pm at the SMC Administrative Office in Lenoir.
Northern Region- Thursday, September 1st from 4:00pm-6:00pm at the Watauga County Administration Office-Commissioners Conference Room in Boone.
Western Region- Thursday, September 8th from 4:00pm-6:00pm at the SMC Administrative Office in Sylva.

Shelly Foreman
Director, Planning and Public Affairs
44 Bonnie Lane, Sylva NC 28779
828-586-5501 x 1219
828-508-9672

JoAnn Townsend
REGISTER OF DEEDS
WATAUGA COUNTY

To: Watauga County Board of Commissioners

From: JoAnn Townsend
Watauga County Register of Deeds

Re: 2011 NCARD Annual Conference

Date: July 25, 2011

The 59th Annual North Carolina Association of Register of Deeds conference will be held September 10-13th, 2011 at the Broyhill Inn and Conference Center on the campus of Appalachian State University. It has been sometime since the conference has been in the western part of the state and as conference coordinator it is my goal to make this one especially meaningful and memorable.

As Watauga County is serving as host for this conference, it would be an honor to have the Watauga County Board of Commissioners to attend the opening banquet which will be held Sunday night, September 11th. This will be a special night as we will have a time of remembrance of 9/11. The banquet will begin at 6:30 pm and typically ends at 9:00 pm.

Per normal county policy the cost of your dinner will be covered by my department. Your spouse is welcome to attend at a cost of $40.

Please let me know by August 15th if you will be able to attend.

Thank you for your support of the Register of Deeds office.

842 WEST KING STREET • COURTHOUSE SUITE 9 • ROOM 119 • BOONE, NORTH CAROLINA 28607
TELEPHONE (828) 265-8052 • FAX (828) 265-7632 • TTY 1-800-735-2962 • VOICE 1-800-735-8262

Blank Page

AGENDA ITEM 13:

PUBLIC COMMENT

MANAGER'S COMMENTS:

Time has been reserved to allow citizen comment to address the Board for any area of interest or concern.

Blank Page

AGENDA ITEM 14:

BREAK

Blank Page

AGENDA ITEM 15:

CLOSED SESSION

MANAGER'S COMMENTS:

Attorney/Client Matters – G. S. 143-318.11(a)(3)

Blank Page